**Spare parts list**
**Ersatzteilliste**
**Liste des pièces de rechange**

**Lista parti di ricambio**
**Lista de repuestos**
**Onderdelenlijst**

**6720614236**
(2010/07) Gö

# NGVA24/28/35-4H
# NGVS24/28/35-4H

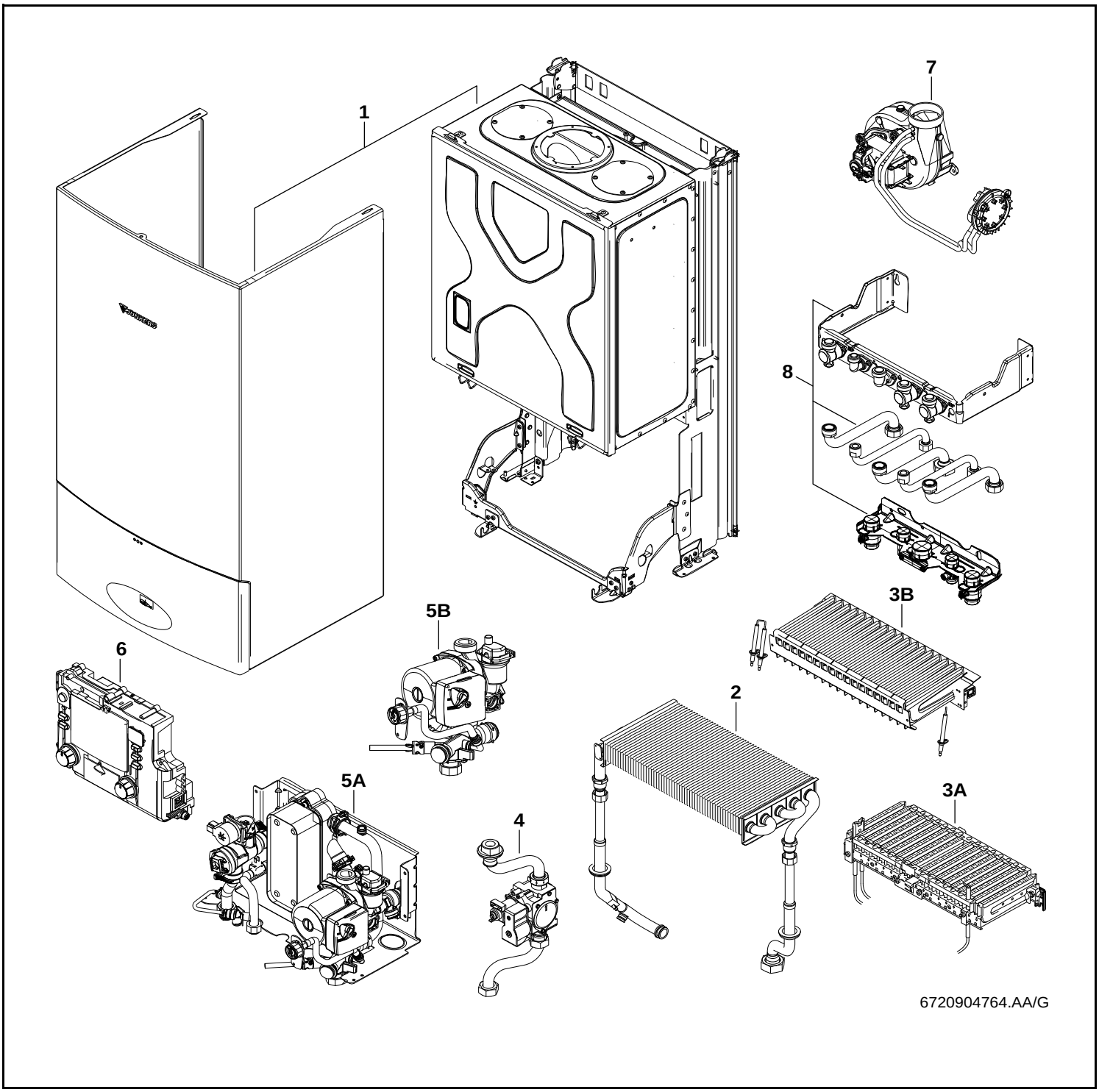


e.l.m. leblanc

Deutsch

## Wichtige Hinweise

- Ersatzteile dürfen nur von einem zugelassenen Installateur eingebaut werden!
- Im Anhang finden Sie:
  - die Übersetzungen aller verwendeten Teilebezeichnungen
  - eine Übersicht der Gerätetypen und Länder, für die diese Ersatzteilliste gilt.

English

## Important notes

- The spare parts may only be installed by an approved installer!
- In the appendix you will find:
  - a list of translations of the names of all parts used
  - a list of the models and countries to which this spare parts list applies.

Français

## Indications importantes

- L'installation des pièces de rechange doit être effectuée par un professionnel qualifié!
- Veuillez trouver en annexe:
  - les traductions de toutes les désignations des pièces utilisées
  - une vue globale des types de chaudières et des pays pour lesquels la présente liste des pièces de rechange est valable.

Português

## Informações importantes

- Peças de substituição só podem ser montadas por um técnico credenciado!
- Em anexo encontra:
  - as traduções das designações de todas as peças utilizadas.
  - lista dos aparelhos e países para os quais esta lista de peças de substituição é válida.

Italiano

## Avvertenze importanti

- Le parti di ricambio possono essere montate esclusivamente da personale qualificato ed in possesso dei requisiti tecnico-professionali!
- In appendice sono reperibili:
  - traduzione di ogni descrizione relativa alle varie parti di ricambio
  - elenco di sigle e codici, corrispondente ai vari paesi di destinazione.

Español

## Indicaciones importantes

- Los repuestos solamente deben ser montados por los servicios técnicos oficiales de la marca!
- En el anexo podrá encontrar:
  - la traducción de todas las denominaciones de piezas empleadas
  - una relación de los tipos de aparato y países en los que se aplica esta lista de repuestos.

Nederlands

## Belangrijke aanwijzing

- Onderdelen mogen alleen door een erkend installateur worden vervangen!
- In de bijlage vindt u:
  - de vertalingen van de gebruikte onderdelentekeningen
  - een overzicht van toesteltypen en de landen waarvoor deze onderdelenlijst bedoeld is.

Türkçe

## Önemli Bilgiler

- Yedek parçalar sadece yetkili tesisatçılar tarafından monte edilebilir!
- Aşağıdaki bilgileri ekli olarak bulabilirsiniz:
  - Tüm kullanılan parça tanımlarının tercümeleri
  - Bu yedek parça listesinin geçerli olduğu tüm cihaz çeşitleri ve ülkelerin özeti.

| Spare parts list<br>Ersatzteilliste | Liste des pièces de rechange<br>Lista parti di ricambio | Lista de repuestos<br>Onderdelenlijst |
|---|---|---|

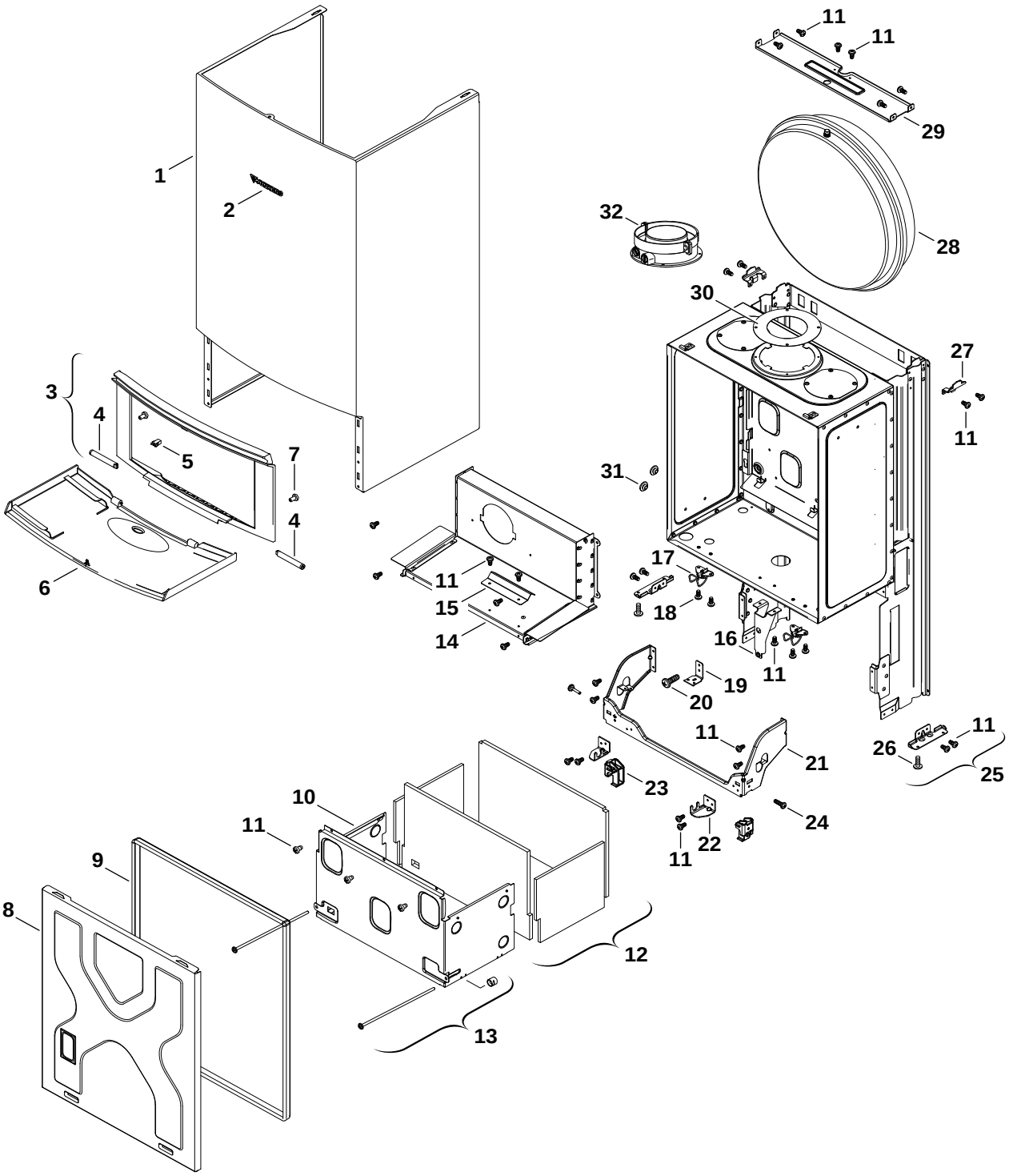


| | | |
|---|---|---|
| **1** | Sheet metal<br>Blechteile<br>Pièces de tôle<br>Parti di lamiera<br>Piezas de chapa<br>Mantel | **NGVA24/28/35-4H**<br>**NGVS24/28/35-4H** |

| Pos | description<br>Bezeichnung<br>dénomination<br>descrizioni<br>descripción<br>benaming | S-Nr | Ordering no.<br>Bestell-Nr.<br>Numero de commande<br>n° d'ordine<br>Número el ordenar<br>Bestelnummer | gas type<br>Gasart<br>type gaz<br>tipo gas<br>tipo gas<br>gassoorte | NGVA24 | NGVA28 | NGVA35 | NGVS24 | NGVS28 | NGVS35 | | | | | | | | | | | Remarks<br>Bemerkungen<br>Remarques<br>Osservazioni<br>Observaciones<br>Opmerkingen |
|---|---|---|---|---|---|---|---|---|---|---|---|---|---|---|---|---|---|---|---|---|---|
| 1 | Front shell | 0400 | 8 716 010 952 0 | | ■ | | | ■ | | | | | | | | | | | | | |
| 1 | Front shell | 0200 | 8 716 010 973 0 | | | ■ | | | ■ | | | | | | | | | | | | |
| 1 | Front shell | 0200 | 8 716 010 991 0 | | | | ■ | | | ■ | | | | | | | | | | | |
| 2 | Trade mark badge | | 8 701 103 134 0 | | ■ | ■ | ■ | ■ | ■ | ■ | | | | | | | | | | | |
| 3 | Frame | 0200,0400 | 8 716 011 310 0 | | | | ■ | | | ■ | | | | | | | | | | | <=FD001 |
| 3 | Frame | 0200,0400 | 8 716 011 408 0 | | | ■ | | | ■ | | | | | | | | | | | | <=FD989 |
| 3 | Frame | 0400 | 8 716 772 787 0 | | ■ | | | ■ | | | | | | | | | | | | | <=FD989 |
| 3 | Frame | 0400 | 8 718 641 168 0 | | ■ | | | ■ | | | | | | | | | | | | | >=FD990 |
| 3 | Frame | 0200,0400 | 8 718 641 172 0 | | | ■ | | | ■ | | | | | | | | | | | | >=FD990 |
| 3 | Frame | 0200,0400 | 8 718 641 198 0 | | | | ■ | | | ■ | | | | | | | | | | | >=FD002 |
| 4 | Damper (2x) | 0200,0400 | 8 713 204 016 0 | | ■ | ■ | ■ | ■ | ■ | ■ | | | | | | | | | | | <=FD001,<=FD989 |
| 4 | Damper (2x) | 0200,0400 | 8 718 224 267 0 | | ■ | ■ | ■ | ■ | ■ | ■ | | | | | | | | | | | >=FD002,>=FD990 |
| 5 | Retaining Catch (1x) | 0200,0400 | 8 713 204 017 0 | | ■ | ■ | ■ | ■ | ■ | ■ | | | | | | | | | | | <=FD001,<=FD989 |
| 5 | Latch (1x) | 0200,0400 | 8 718 224 302 0 | | ■ | ■ | ■ | ■ | ■ | ■ | | | | | | | | | | | >=FD002,>=FD990 |
| 6 | Shield | 0200 | 8 716 011 308 0 | | | | ■ | | | ■ | | | | | | | | | | | <=FD001 |
| 6 | Shield | 0200 | 8 716 011 409 0 | | | ■ | | | ■ | | | | | | | | | | | | <=FD989 |
| 6 | Shield | 0400 | 8 716 011 859 0 | | ■ | | | ■ | | | | | | | | | | | | | <=FD990 |
| 6 | Shield | 0200 | 8 718 641 193 0 | | | | ■ | | | ■ | | | | | | | | | | | >=FD002 |
| 6 | Cover light grey | 0200 | 8 718 641 330 0 | | | ■ | | | ■ | | | | | | | | | | | | >=FD990 |
| 6 | Shield | 0400 | 8 718 641 395 0 | | ■ | | | ■ | | | | | | | | | | | | | >=FD991 |
| 6 | Shield | 0400 | 8 718 641 396 0 | | | ■ | | | ■ | | | | | | | | | | | | <=FD990,>=FD991 |
| 6 | Shield | 0400 | 8 718 641 397 0 | | | | ■ | | | | | | | | | | | | | | <=FD001 |
| 7 | Screw (10x) | | 2 910 619 409 0 | | ■ | ■ | ■ | ■ | ■ | ■ | | | | | | | | | | | |
| 8 | Cover | 0400 | 8 716 010 948 0 | | ■ | | | ■ | | | | | | | | | | | | | |
| 8 | Cover | 0200 | 8 716 010 987 0 | | | | ■ | | | ■ | | | | | | | | | | | |
| 8 | Cover | 0200 | 8 716 011 145 0 | | | ■ | | | ■ | | | | | | | | | | | | |
| 9 | Seal | 0200 | 8 716 010 833 0 | | | ■ | | | ■ | | | | | | | | | | | | |
| 9 | Seal | 0400 | 8 716 011 068 0 | | ■ | | | ■ | | | | | | | | | | | | | |
| 9 | Seal | 0200 | 8 716 011 069 0 | | | | ■ | | | ■ | | | | | | | | | | | |
| 10 | Combustion chamber | 0400 | 8 716 010 944 0 | | ■ | | | ■ | | | | | | | | | | | | | |
| 10 | Combustion chamber | 0200 | 8 716 010 964 0 | | | ■ | | | ■ | | | | | | | | | | | | |
| 10 | Combustion chamber | 0200 | 8 716 010 984 0 | | | | ■ | | | ■ | | | | | | | | | | | |
| 11 | Screw m4x6 taptite zc pl p/h | | 2 914 411 424 0 | | ■ | ■ | ■ | ■ | ■ | ■ | | | | | | | | | | | |
| 12 | Insulationset | 0400 | 8 716 010 936 0 | | ■ | | | ■ | | | | | | | | | | | | | |
| 12 | Insulationset | 0200 | 8 716 010 960 0 | | | ■ | | | ■ | | | | | | | | | | | | |
| 12 | Insulationset | 0200 | 8 716 010 980 0 | | | | ■ | | | ■ | | | | | | | | | | | |
| 13 | Screw | | 8 716 010 830 0 | | ■ | ■ | ■ | ■ | ■ | ■ | | | | | | | | | | | |
| 14 | Flue gas collector | 0400 | 8 716 010 937 0 | | ■ | | | ■ | | | | | | | | | | | | | |
| 14 | Flue gas collector | 0200 | 8 716 010 961 0 | | | ■ | | | ■ | | | | | | | | | | | | |
| 14 | Flue gas collector | 0200 | 8 716 010 981 0 | | | | ■ | | | ■ | | | | | | | | | | | |
| 15 | Fixing bracket | | 8 716 771 598 0 | | ■ | ■ | ■ | ■ | ■ | ■ | | | | | | | | | | | |
| 16 | Angle bracket | | 8 716 010 877 0 | | ■ | ■ | ■ | ■ | ■ | ■ | | | | | | | | | | | |
| 17 | Spring | | 8 716 010 840 0 | | ■ | ■ | ■ | ■ | ■ | ■ | | | | | | | | | | | |
| 18 | Screw | | 8 716 011 481 0 | | ■ | ■ | ■ | ■ | ■ | ■ | | | | | | | | | | | |
| 19 | Fixing bracket | | 8 716 011 040 0 | | ■ | ■ | ■ | ■ | ■ | ■ | | | | | | | | | | | |
| 20 | Screw | | 8 713 401 109 0 | | ■ | ■ | ■ | ■ | ■ | ■ | | | | | | | | | | | |
| 21 | Mounting frame | | 8 716 012 803 0 | | ■ | ■ | ■ | ■ | ■ | ■ | | | | | | | | | | | |
| 22 | Covering sheet | | 8 716 010 836 0 | | ■ | ■ | ■ | ■ | ■ | ■ | | | | | | | | | | | |
| 23 | Fixing bracket | | 8 716 011 029 0 | | ■ | ■ | ■ | ■ | ■ | ■ | | | | | | | | | | | |
| 24 | Screw | | 8 713 401 062 0 | | ■ | ■ | ■ | ■ | ■ | ■ | | | | | | | | | | | |
| 25 | Angle bracket | 0200 | 8 716 010 843 0 | | | ■ | | | ■ | | | | | | | | | | | | |
| 25 | Connection plate | 0200 | 8 716 011 013 0 | | | | ■ | | | ■ | | | | | | | | | | | |

**NGVA24/28/35-4H**
**NGVS24/28/35-4H**

Sheet metal
Blechteile
Pièces de tôle
Parti di lamiera
Piezas de chapa
Mantel

**1**

| Spare parts list<br>Ersatzteilliste | Liste des pièces de rechange<br>Lista parti di ricambio | Lista de repuestos<br>Onderdelenlijst |
|---|---|---|

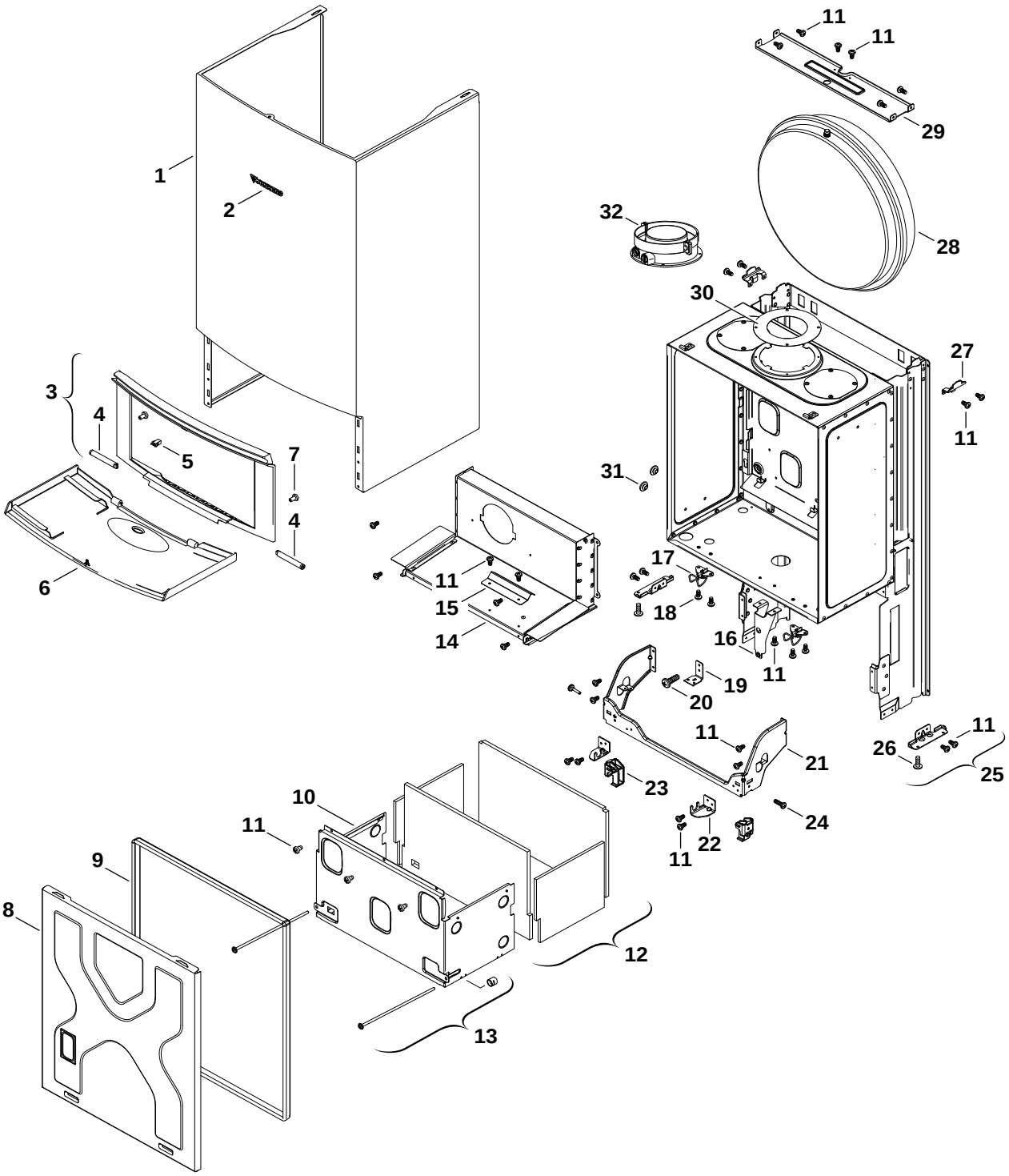


6720904765.AA/G

| | | |
|---|---|---|
| **1** | Sheet metal<br>Blechteile<br>Pièces de tôle<br>Parti di lamiera<br>Piezas de chapa<br>Mantel | **NGVA24/28/35-4H**<br>**NGVS24/28/35-4H** |

| Pos | description<br>Bezeichnung<br>dénomination<br>descrizioni<br>descripción<br>benaming | S-Nr | Ordering no.<br>Bestell-Nr.<br>Numero de commande<br>n° d'ordine<br>Número el ordenar<br>Bestelnummer | gas type<br>Gasart<br>type gaz<br>tipo gas<br>tipo gas<br>gassoorte | NGVA24 | NGVA28 | NGVA35 | NGVS24 | NGVS28 | NGVS35 | | | | | | | | | | | Remarks<br>Bemerkungen<br>Remarques<br>Osservazioni<br>Observaciones<br>Opmerkingen |
|---|---|---|---|---|---|---|---|---|---|---|---|---|---|---|---|---|---|---|---|---|---|
| 25 | Connection plate | 0400 | 8 716 011 041 0 | | ■ | | | ■ | | | | | | | | | | | | | |
| 26 | Screw (10x) | | 2 918 140 417 0 | | ■ | ■ | ■ | ■ | ■ | ■ | | | | | | | | | | | |
| 27 | Fixing bracket | 0200 | 8 716 010 810 0 | | | ■ | | | ■ | | | | | | | | | | | | |
| 27 | Connection plate | 0200 | 8 716 011 012 0 | | | | ■ | | | ■ | | | | | | | | | | | |
| 28 | Expansion vessel | 0200 | 8 716 011 190 0 | | | | ■ | | | ■ | | | | | | | | | | | |
| 28 | Expansion vessel | 0200,0400 | 8 716 142 502 0 | | ■ | ■ | | ■ | ■ | | | | | | | | | | | | |
| 29 | Fixing bracket | | 8 716 010 929 0 | | ■ | ■ | ■ | ■ | ■ | ■ | | | | | | | | | | | |
| 30 | Throttle disc (Ø80,Ø82,Ø85,Ø90) | 0400 | 8 716 012 633 0 | | | ■ | ■ | | ■ | | | | | | | | | | | | |
| 30 | Throttle disc (Ø72,Ø76,Ø78,Ø85) | 0400 | 8 716 012 873 0 | | ■ | | | ■ | | | | | | | | | | | | | |
| 31 | Screw | | 8 713 401 058 0 | | ■ | ■ | ■ | ■ | ■ | ■ | | | | | | | | | | | |
| 32 | Adapter 80/110 | | 8 716 771 516 0 | | ■ | ■ | ■ | ■ | ■ | ■ | | | | | | | | | | | |

**NGVA24/28/35-4H**
**NGVS24/28/35-4H**

Sheet metal
Blechteile
Pièces de tôle
Parti di lamiera
Piezas de chapa
Mantel

**1**

| Spare parts list<br>Ersatzteilliste | Liste des pièces de rechange<br>Lista parti di ricambio | Lista de repuestos<br>Onderdelenlijst |
|---|---|---|

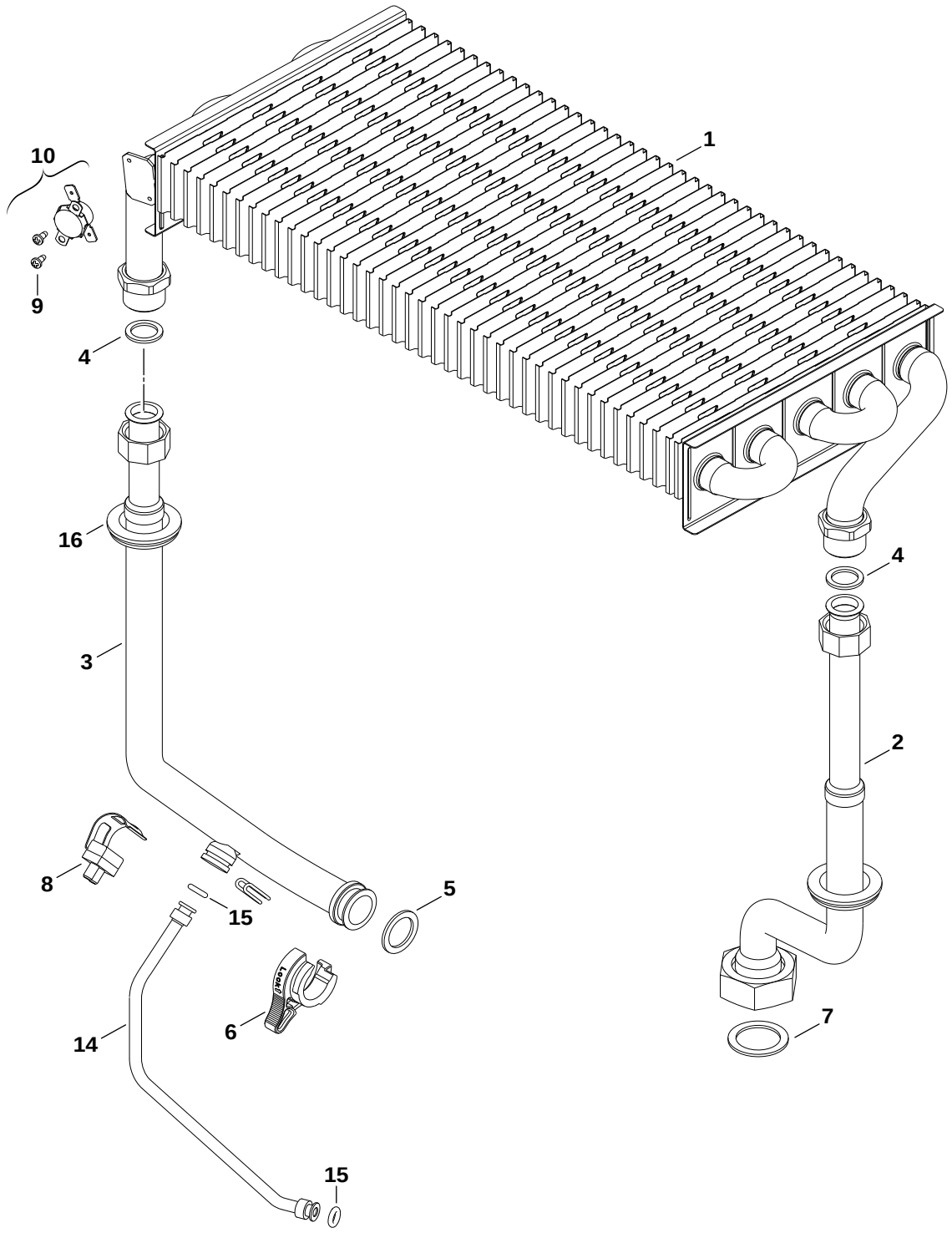


6720905242.AA/G

| | | |
|---|---|---|
| **2** | Heat exchanger<br>Wärmeübertrager<br>Corps de chauffe<br>Blocco lamellare<br>Intercambiador de calor<br>Warmtewisselaar | **NGVA24/28/35-4H**<br>**NGVS24/28/35-4H** |

| Pos | description<br>Bezeichnung<br>dénomination<br>descrizioni<br>descripción<br>benaming | S-Nr | Ordering no.<br>Bestell-Nr.<br>Numero de commande<br>n° d'ordine<br>Número el ordenar<br>Bestelnummer | gas type<br>Gasart<br>type gaz<br>tipo gas<br>tipo gas<br>gassoorte | NGVA24 | NGVA28 | NGVA35 | NGVS24 | NGVS28 | NGVS35 | | | | | | | | | | | Remarks<br>Bemerkungen<br>Remarques<br>Osservazioni<br>Observaciones<br>Opmerkingen |
|---|---|---|---|---|---|---|---|---|---|---|---|---|---|---|---|---|---|---|---|---|---|
| 1 | Heat exchanger | 0400 | 8 719 905 645 0 | | ■ | | | ■ | | | | | | | | | | | | | |
| 1 | Heat exchanger | 0200 | 8 719 905 647 0 | | | ■ | | | ■ | | | | | | | | | | | | |
| 1 | Heat exchanger | 0200 | 8 719 905 648 0 | | | | ■ | | | ■ | | | | | | | | | | | |
| 2 | Pipe | 0200 | 8 716 012 694 0 | | | ■ | | | ■ | | | | | | | | | | | | |
| 2 | Pipe | 0400 | 8 716 012 696 0 | | ■ | | | ■ | | | | | | | | | | | | | |
| 2 | Pipe | 0200 | 8 716 012 698 0 | | | | ■ | | | ■ | | | | | | | | | | | |
| 3 | Pipe | 0400 | 8 716 012 693 0 | | ■ | | | | | | | | | | | | | | | | |
| 3 | Pipe | 0200 | 8 716 012 695 0 | | | ■ | | | | | | | | | | | | | | | |
| 3 | Pipe | | 8 716 012 697 0 | | | | ■ | | | | | | | | | | | | | | |
| 3 | Pipe | 0400 | 8 718 641 043 0 | | | | | ■ | | | | | | | | | | | | | |
| 3 | Pipe | 0200 | 8 718 641 045 0 | | | | | | ■ | | | | | | | | | | | | |
| 3 | Pipe | 0200 | 8 718 641 046 0 | | | | | | | ■ | | | | | | | | | | | |
| 4 | Washer 18.6 X 13.5 X 1.5 (10x) | | 8 710 103 045 0 | | ■ | ■ | ■ | ■ | ■ | ■ | | | | | | | | | | | |
| 5 | O-ring 17x4 (10x) | | 8 716 771 154 0 | | ■ | ■ | ■ | ■ | ■ | ■ | | | | | | | | | | | |
| 6 | Clip | | 8 716 010 800 0 | | ■ | ■ | ■ | ■ | ■ | ■ | | | | | | | | | | | |
| 7 | Washer | | 8 710 103 164 0 | | ■ | ■ | ■ | ■ | ■ | ■ | | | | | | | | | | | |
| 8 | Temperature sensor NTC | | 8 716 011 073 0 | | ■ | ■ | ■ | ■ | ■ | ■ | | | | | | | | | | | |
| 9 | Screw M2,9x6,5 (10x) | | 2 910 611 404 0 | | ■ | ■ | ■ | ■ | ■ | ■ | | | | | | | | | | | |
| 10 | Temperature limit | | 8 716 011 155 0 | | ■ | ■ | ■ | ■ | ■ | ■ | | | | | | | | | | | |
| 14 | Pipe | 0200,0400 | 8 716 012 706 0 | | ■ | ■ | ■ | ■ | ■ | ■ | | | | | | | | | | | |
| 15 | O-ring 6x2,5 (10x) | | 8 716 771 164 0 | | ■ | ■ | ■ | ■ | ■ | ■ | | | | | | | | | | | |
| 16 | Rubber grommet | | 8 718 640 144 0 | | ■ | ■ | ■ | ■ | ■ | ■ | | | | | | | | | | | |

**NGVA24/28/35-4H**
**NGVS24/28/35-4H**

Heat exchanger
Wärmeübertrager
Corps de chauffe
Blocco lamellare
Intercambiador de calor
Warmtewisselaar

**2**

| Spare parts list<br>Ersatzteilliste | Liste des pièces de rechange<br>Lista parti di ricambio | Lista de repuestos<br>Onderdelenlijst |
|---|---|---|

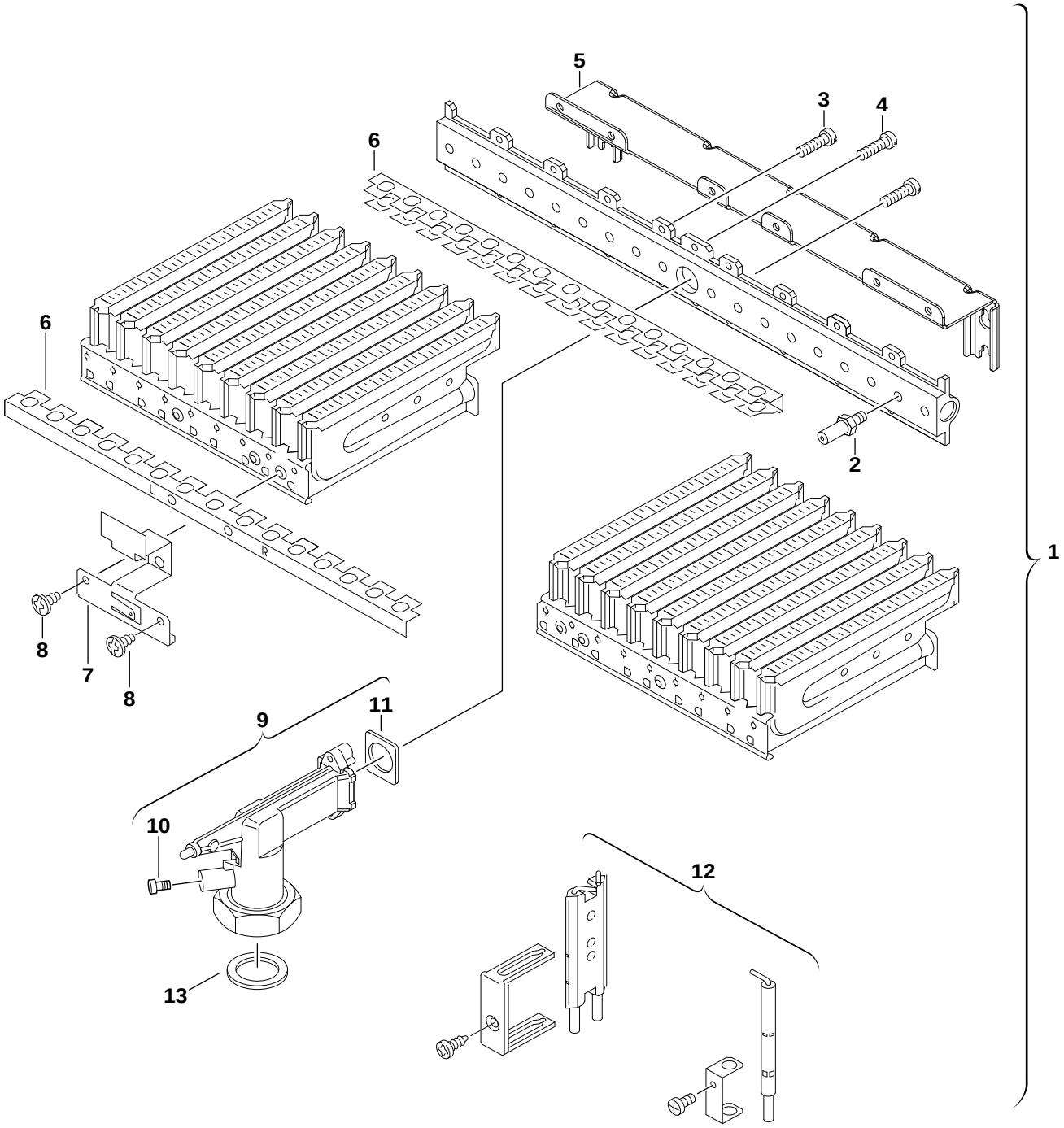


6720904766.AA/G

| | |
|---|---|
| **3** Burner<br>Brenner<br>Brûleur<br>**A** Bruciatore<br>Quemador<br>Brander | **NGVA24/28/35-4H**<br>**NGVS24/28/35-4H** |

| Pos | description<br>Bezeichnung<br>dénomination<br>descrizioni<br>descripción<br>benaming | S-Nr | Ordering no.<br>Bestell-Nr.<br>Numero de commande<br>n° d'ordine<br>Número el ordenar<br>Bestelnummer | gas type<br>Gasart<br>type gaz<br>tipo gas<br>tipo gas<br>gassoorte | NGVA24 | NGVA28 | NGVS24 | NGVS28 | | | | | | | | | | | | | Remarks<br>Bemerkungen<br>Remarques<br>Osservazioni<br>Observaciones<br>Opmerkingen |
|---|---|---|---|---|---|---|---|---|---|---|---|---|---|---|---|---|---|---|---|---|---|
| 1 | Burner | 0400 | 8 716 011 293 0 | | | ■ | | ■ | | | | | | | | | | | | | |
| 1 | Burner | 0400 | 8 716 011 295 0 | | ■ | | ■ | | | | | | | | | | | | | | |
| 1 | Burner | 0200 | 8 716 012 593 0 | | | ■ | | ■ | | | | | | | | | | | | | |
| 1 | Burner | 0200 | 8 716 013 029 0 | | | ■ | | ■ | | | | | | | | | | | | | |
| 2 | Nozzle (115) (10x) | 0200,0400 | 8 708 202 115 0 | | ■ | ■ | ■ | ■ | | | | | | | | | | | | | |
| 2 | Nozzle (112) (10x) | 0400 | 8 708 202 137 0 | | | ■ | | ■ | | | | | | | | | | | | | |
| 2 | Nozzle (126) | 0400 | 8 708 202 143 0 | | | ■ | | ■ | | | | | | | | | | | | | |
| 3 | Screw(10x) | 0200,0400 | 8 703 401 069 0 | | ■ | ■ | ■ | ■ | | | | | | | | | | | | | |
| 4 | Screw M4x10 lg pozi pan hd m/c | 0200,0400 | 2 912 301 120 0 | | ■ | ■ | ■ | ■ | | | | | | | | | | | | | |
| 5 | Fixing bracket | 0200,0400 | 8 716 011 001 0 | | ■ | ■ | ■ | ■ | | | | | | | | | | | | | |
| 6 | Cross ignition bridge | 0400 | 8 711 304 305 0 | | ■ | | ■ | | | | | | | | | | | | | | |
| 6 | Cross ignition bridge | 0200 | 8 711 304 622 0 | | | ■ | | ■ | | | | | | | | | | | | | |
| 7 | Fixing bracket (10x) | 0200,0400 | 8 701 309 094 0 | | ■ | ■ | ■ | ■ | | | | | | | | | | | | | |
| 8 | Screw (10x) | | 2 910 619 409 0 | | ■ | ■ | ■ | ■ | | | | | | | | | | | | | |
| 9 | Connector | 0200,0400 | 8 715 209 078 0 | | ■ | ■ | ■ | ■ | | | | | | | | | | | | | |
| 10 | Pressure tapping | 0200,0400 | 8 703 305 191 0 | | ■ | ■ | ■ | ■ | | | | | | | | | | | | | |
| 11 | Washer (10x) | 0200,0400 | 8 701 003 010 0 | | ■ | ■ | ■ | ■ | | | | | | | | | | | | | |
| 12 | Set of electrodes | 0200,0400 | 8 718 107 050 0 | | ■ | ■ | ■ | ■ | | | | | | | | | | | | | |
| 13 | Washer 1" (10x) | 0200,0400 | 8 710 103 060 0 | | ■ | ■ | ■ | ■ | | | | | | | | | | | | | |
| | Gas conversion kit (==>G20,20mbar) | 0400 | 8 716 011 939 0 | | | ■ | | ■ | | | | | | | | | | | | | |
| | Gas conversion kit (==>G30,30 / 37mbar) | 0200 | 8 716 011 948 0 | | | ■ | | ■ | | | | | | | | | | | | | |
| | Gas conversion kit (==>G20,20mbar) | 0400 | 8 716 012 830 0 | | ■ | | ■ | | | | | | | | | | | | | | |
| | Gas conversion kit (==>G30,37mbar) | 0400 | 8 716 012 831 0 | | ■ | | ■ | | | | | | | | | | | | | | |
| | Gas conversion kit (G20==>G230) | 0400 | 8 716 013 158 0 | | ■ | | ■ | | | | | | | | | | | | | | |
| | Gas conversion kit (G20==>G230) | 0400 | 8 716 013 159 0 | | | ■ | | ■ | | | | | | | | | | | | | |
| | Gas conversion kit (==>G20,) | 0200 | 8 716 013 173 0 | | | ■ | | ■ | | | | | | | | | | | | | |

**NGVA24/28/35-4H**
**NGVS24/28/35-4H**

Burner
Brenner
Brûleur
Bruciatore
Quemador
Brander

**3A**

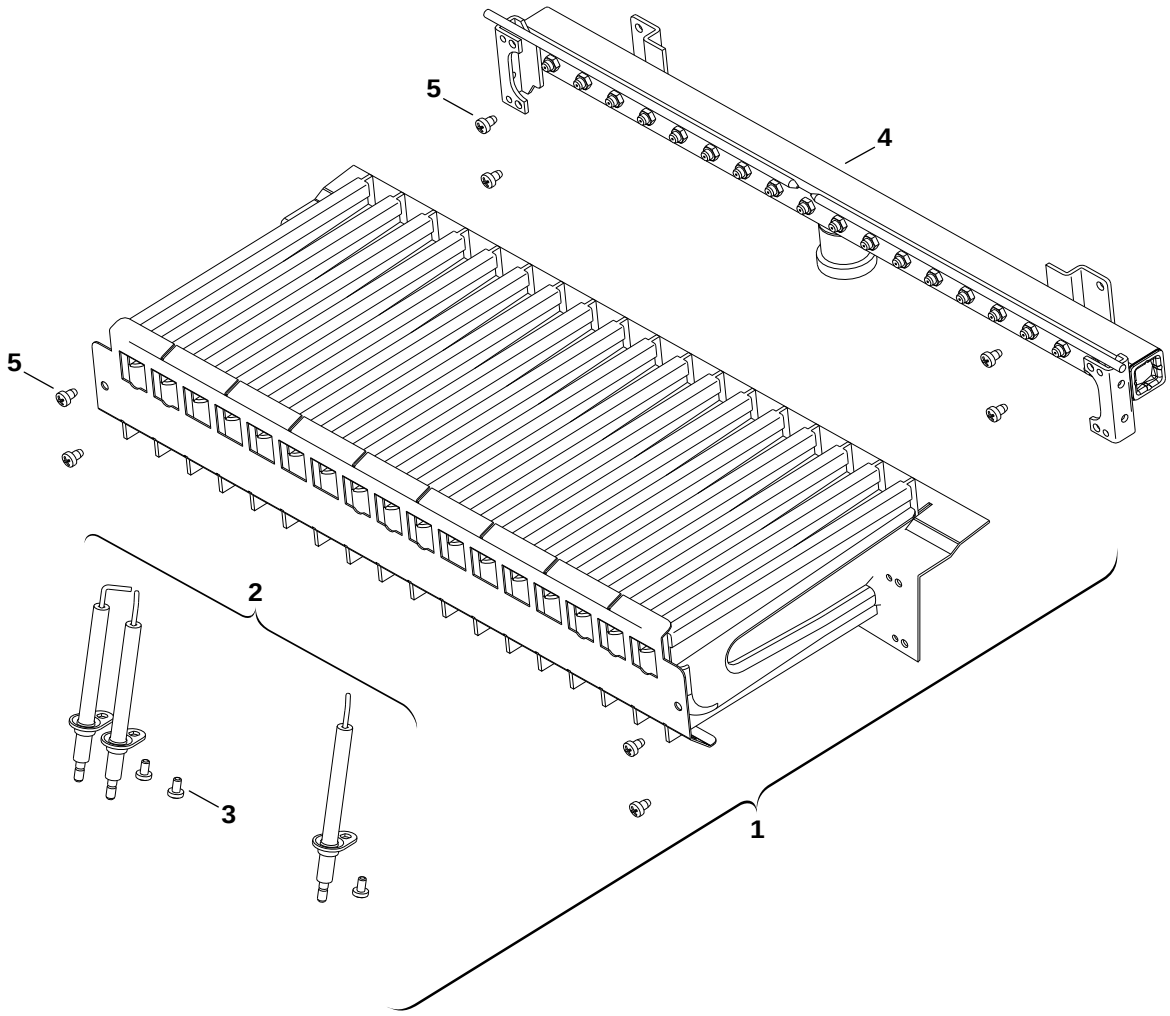


6720904767.AA/G

| | |
|---|---|
| **3** Burner<br>Brenner<br>Brûleur<br>**B** Bruciatore<br>Quemador<br>Brander | **NGVA24/28/35-4H**<br>**NGVS24/28/35-4H** |

| Pos | description<br>Bezeichnung<br>dénomination<br>descrizioni<br>descripción<br>benaming | S-Nr | Ordering no.<br>Bestell-Nr.<br>Numero de commande<br>n° d'ordine<br>Número el ordenar<br>Bestelnummer | gas type<br>Gasart<br>type gaz<br>tipo gas<br>tipo gas<br>gassoorte | NGVA35 | NGVS35 | | | | | | | | | | | | | | | Remarks<br>Bemerkungen<br>Remarques<br>Osservazioni<br>Observaciones<br>Opmerkingen |
|---|---|---|---|---|---|---|---|---|---|---|---|---|---|---|---|---|---|---|---|---|---|
| 1 | Burner | 0200 | 8 716 011 304 0 | | ■ | ■ | | | | | | | | | | | | | | | |
| 2 | Set of electrodes | 0200 | 8 716 772 593 0 | | ■ | ■ | | | | | | | | | | | | | | | |
| 3 | Screw (10x) | | 2 910 619 409 0 | | ■ | ■ | | | | | | | | | | | | | | | |
| 4 | Tube distributor | 0200 | 8 716 011 303 0 | | ■ | ■ | | | | | | | | | | | | | | | |
| 5 | Screw m4x6 taptite zc pl p/h | | 2 914 411 424 0 | | ■ | ■ | | | | | | | | | | | | | | | |
| | Gas conversion kit (==>G20,20mbar) | 0400 | 8 716 011 962 0 | | ■ | | | | | | | | | | | | | | | | |
| | Gas conversion kit (==>G30,30mbar) | 0400 | 8 716 011 964 0 | | ■ | | | | | | | | | | | | | | | | |
| | Gas conversion kit (G20==>G230) | 0400 | 8 716 013 160 0 | | ■ | | | | | | | | | | | | | | | | |
| | Gas conversion kit (==>G20,) | 0200 | 8 716 013 174 0 | | ■ | ■ | | | | | | | | | | | | | | | |
| | Gas conversion kit (==>G30,) | 0200 | 8 716 013 175 0 | | ■ | ■ | | | | | | | | | | | | | | | |

**NGVA24/28/35-4H**
**NGVS24/28/35-4H**

Burner
Brenner
Brûleur
Bruciatore
Quemador
Brander

**3B**

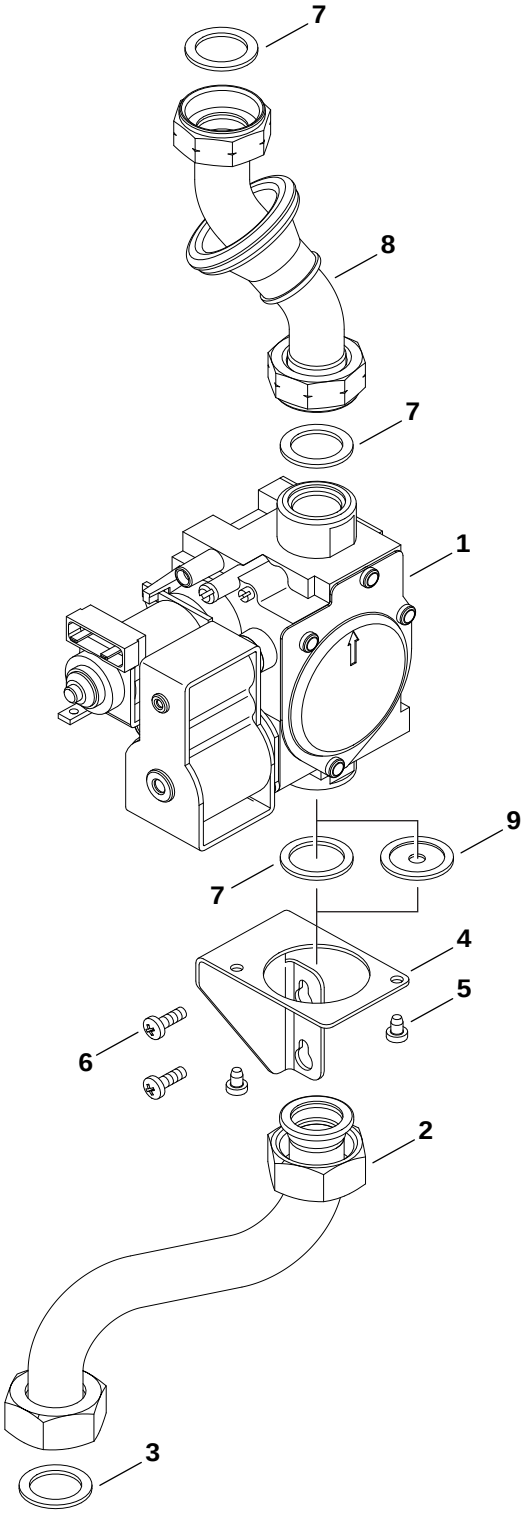


6720904768.AA/G

| | | |
|---|---|---|
| **4** | Gas valve<br>Gasarmatur<br>Bloc gaz<br>Gruppo gas<br>Cuerpo de gas<br>Gasregelblok | **NGVA24/28/35-4H**<br>**NGVS24/28/35-4H** |

| Pos | description<br>Bezeichnung<br>dénomination<br>descrizioni<br>descripción<br>benaming | S-Nr | Ordering no.<br>Bestell-Nr.<br>Numero de commande<br>n° d'ordine<br>Número el ordenar<br>Bestelnummer | gas type<br>Gasart<br>type gaz<br>tipo gas<br>tipo gas<br>gassoorte | NGVA24 | NGVA28 | NGVA35 | NGVS24 | NGVS28 | NGVS35 | | | | | | | | | | Remarks<br>Bemerkungen<br>Remarques<br>Osservazioni<br>Observaciones<br>Opmerkingen |
|---|---|---|---|---|---|---|---|---|---|---|---|---|---|---|---|---|---|---|---|---|
| 1 | Gas valve | | 8 747 003 700 0 | | ■ | ■ | ■ | ■ | ■ | ■ | | | | | | | | | | |
| 2 | Gas supply pipe | | 8 716 012 653 0 | | ■ | ■ | ■ | ■ | ■ | ■ | | | | | | | | | | |
| 3 | Fibre washer 23.9 X 17.2 X 1.5 (10x) | | 8 710 103 043 0 | | ■ | ■ | ■ | ■ | ■ | ■ | | | | | | | | | | |
| 4 | Support | 0200,0400 | 8 716 010 806 0 | | | ■ | ■ | | ■ | ■ | | | | | | | | | | |
| 4 | Support | 0200,0400 | 8 716 012 663 0 | | ■ | ■ | ■ | ■ | ■ | | | | | | | | | | | |
| 5 | Screw m4x6 taptite zc pl p/h | | 2 914 411 424 0 | | ■ | ■ | ■ | ■ | ■ | ■ | | | | | | | | | | |
| 6 | Screw m4 x 12mm taptite zc pl ph | | 2 914 411 404 0 | | ■ | ■ | ■ | ■ | ■ | ■ | | | | | | | | | | |
| 7 | Flat gasket (10x) | | 2 916 710 529 0 | | ■ | ■ | ■ | ■ | ■ | ■ | | | | | | | | | | |
| 8 | Gas pipe | 0200,0400 | 8 716 012 701 0 | | ■ | ■ | | ■ | ■ | | | | | | | | | | | |
| 8 | Gas pipe | 0200 | 8 716 012 703 0 | | | | ■ | | | ■ | | | | | | | | | | |
| 9 | Washer 1" (10x) | 0400 | 8 710 103 060 0 | | ■ | | ■ | ■ | | | | | | | | | | | | |
| 9 | Throttle disc | 0200 | 8 716 012 859 0 | | | | ■ | | | ■ | | | | | | | | | | |
| 9 | Throttle disc | 0200 | 8 719 905 854 0 | | | ■ | | | ■ | | | | | | | | | | | |

**NGVA24/28/35-4H**
**NGVS24/28/35-4H**

Gas valve
Gasarmatur
Bloc gaz
Gruppo gas
Cuerpo de gas
Gasregelblok

**4**

| Spare parts list<br>Ersatzteilliste | Liste des pièces de rechange<br>Lista parti di ricambio | Lista de repuestos<br>Onderdelenlijst |
|---|---|---|

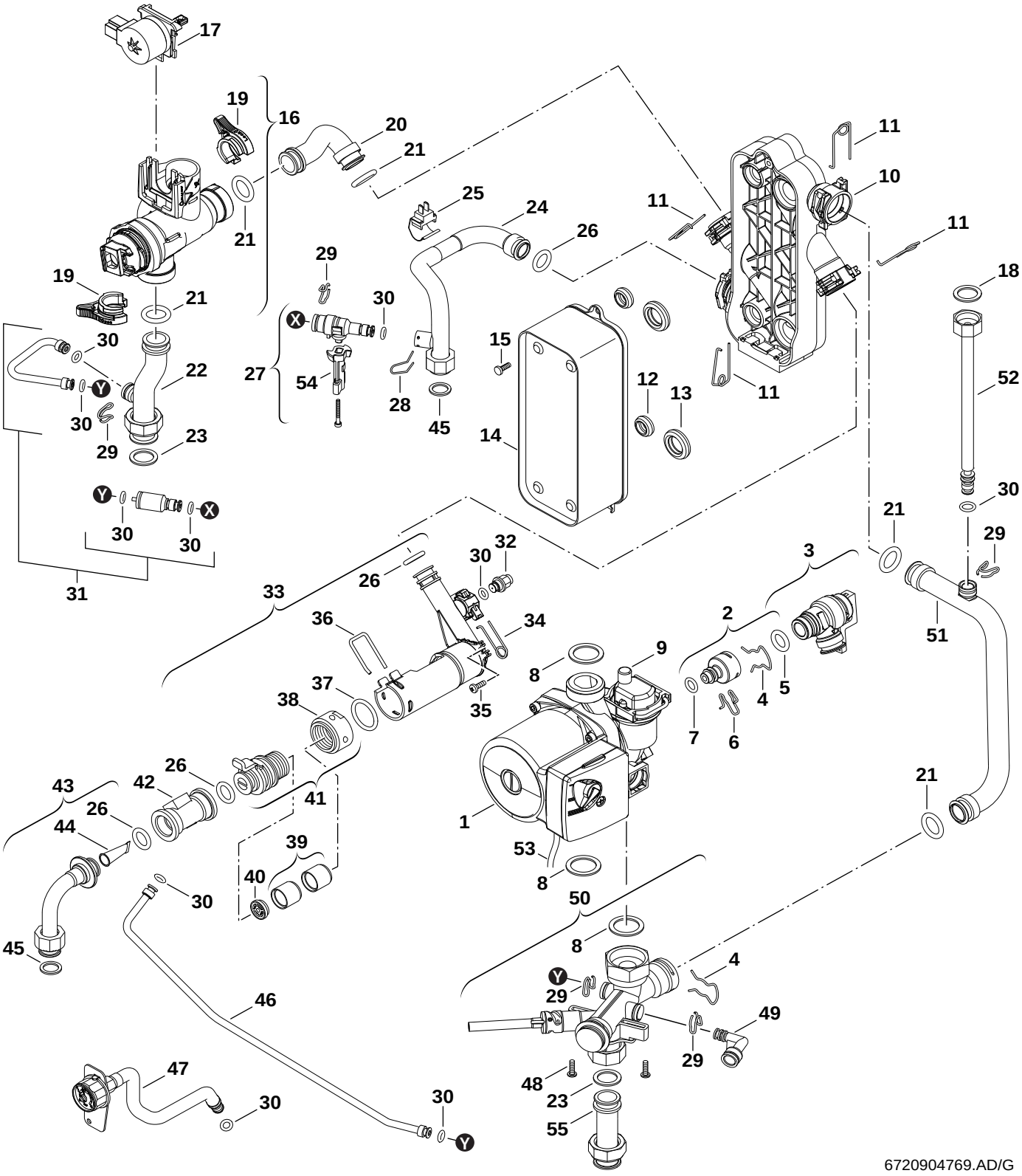


| | |
|---|---|
| **5** **A** Pump/Tubes<br>Pumpe/Rohre<br>Pompe/Tubes<br>Pompa/Raccordi<br>Bomba/Tubos<br>Pomp/Pijps | **NGVA24/28/35-4H**<br>**NGVS24/28/35-4H** |

| Pos | description<br>Bezeichnung<br>dénomination<br>descrizioni<br>descripción<br>benaming | S-Nr | Ordering no.<br>Bestell-Nr.<br>Numero de commande<br>n° d'ordine<br>Número el ordenar<br>Bestelnummer | gas type<br>Gasart<br>type gaz<br>tipo gas<br>tipo gas<br>gassoorte | NGVA24 | NGVA28 | NGVA35 | | | | | | | | | | | | | | Remarks<br>Bemerkungen<br>Remarques<br>Osservazioni<br>Observaciones<br>Opmerkingen |
|---|---|---|---|---|---|---|---|---|---|---|---|---|---|---|---|---|---|---|---|---|---|
| 1 | Pump | | 8 716 010 791 0 | | | | ■ | | | | | | | | | | | | | | |
| 1 | Pump | 0400 | 8 716 010 880 0 | | ■ | | | | | | | | | | | | | | | | |
| 1 | Pump | 0200 | 8 716 011 394 0 | | | ■ | | | | | | | | | | | | | | | |
| 2 | Adapter | | 8 716 010 793 0 | | ■ | ■ | ■ | | | | | | | | | | | | | | |
| 3 | Safety relief valve | | 8 716 010 876 0 | | ■ | ■ | ■ | | | | | | | | | | | | | | |
| 4 | Wireform spring | | 8 711 200 016 0 | | ■ | ■ | ■ | | | | | | | | | | | | | | |
| 5 | O-ring | | 8 716 771 597 0 | | ■ | ■ | ■ | | | | | | | | | | | | | | |
| 6 | Wireform spring (10x) | | 8 714 707 024 0 | | ■ | ■ | ■ | | | | | | | | | | | | | | |
| 7 | O-ring (10x) | | 8 710 205 090 0 | | ■ | ■ | ■ | | | | | | | | | | | | | | |
| 8 | Washer | | 8 710 103 164 0 | | ■ | ■ | ■ | | | | | | | | | | | | | | |
| 9 | Automatic purger | | 8 718 505 039 0 | | ■ | ■ | ■ | | | | | | | | | | | | | | |
| 10 | Lower housing | 0200,0400 | 8 716 011 819 0 | | ■ | ■ | ■ | | | | | | | | | | | | | | |
| 11 | Wire form spring 18 mm (x10) | 0200,0400 | 8 716 771 169 0 | | ■ | ■ | ■ | | | | | | | | | | | | | | |
| 12 | Washer (10x) | 0200,0400 | 8 716 771 325 0 | | ■ | ■ | ■ | | | | | | | | | | | | | | |
| 13 | Washer (10x) | 0200,0400 | 8 716 771 003 0 | | ■ | ■ | ■ | | | | | | | | | | | | | | |
| 14 | Heat exchanger | 0200,0400 | 8 716 771 987 0 | | ■ | ■ | ■ | | | | | | | | | | | | | | |
| 15 | Screw & washer assembly M5x30 | 0200,0400 | 8 716 106 452 0 | | ■ | ■ | ■ | | | | | | | | | | | | | | |
| 16 | 3-way valve | 0200,0400 | 8 716 010 801 0 | | ■ | ■ | ■ | | | | | | | | | | | | | | |
| 17 | Motor | 0200,0400 | 8 716 011 360 0 | | ■ | ■ | ■ | | | | | | | | | | | | | | |
| 18 | Washer (10X) | 0200,0400 | 8 710 103 121 0 | | ■ | ■ | ■ | | | | | | | | | | | | | | |
| 19 | Clip | | 8 716 010 800 0 | | ■ | ■ | ■ | | | | | | | | | | | | | | |
| 20 | Pipe | 0200,0400 | 8 716 012 637 0 | | ■ | ■ | ■ | | | | | | | | | | | | | | |
| 21 | O-ring 17x4 (10x) | | 8 716 771 154 0 | | ■ | ■ | ■ | | | | | | | | | | | | | | |
| 22 | Pipe | 0400 | 8 716 012 649 0 | | ■ | ■ | ■ | | | | | | | | | | | | | | |
| 22 | Flow pipe | 0200 | 8 716 012 709 0 | | | ■ | ■ | | | | | | | | | | | | | | |
| 23 | Fibre washer 23.9 X 17.2 X 1.5 (10x) | | 8 710 103 043 0 | | ■ | ■ | ■ | | | | | | | | | | | | | | |
| 24 | Flow pipe | 0400 | 8 716 012 652 0 | | ■ | ■ | ■ | | | | | | | | | | | | | | |
| 24 | Pipe | 0200 | 8 716 012 857 0 | | | ■ | ■ | | | | | | | | | | | | | | |
| 25 | Temperature sensor | 0200,0400 | 8 716 010 809 0 | | ■ | ■ | ■ | | | | | | | | | | | | | | |
| 26 | O-ring 13,87x3,53 (10x) | 0200,0400 | 8 716 771 155 0 | | ■ | ■ | ■ | | | | | | | | | | | | | | |
| 27 | Filling loop | 0400 | 8 716 010 318 0 | | ■ | ■ | ■ | | | | | | | | | | | | | | |
| 28 | Wireform spring | 0200,0400 | 8 716 148 354 0 | | ■ | ■ | ■ | | | | | | | | | | | | | | |
| 29 | Clip (10x) | | 8 719 905 335 0 | | ■ | ■ | ■ | | | | | | | | | | | | | | |
| 30 | O-ring 6x2,5 (10x) | | 8 716 771 164 0 | | ■ | ■ | ■ | | | | | | | | | | | | | | |
| 31 | Filling loop | 0400 | 8 716 011 748 0 | | | ■ | | | | | | | | | | | | | | | |
| 32 | Blow off valve (I) 15bar | 0200,0400 | 8 717 401 016 0 | | ■ | ■ | ■ | | | | | | | | | | | | | | |
| 33 | Turbine case | 0200,0400 | 8 716 011 820 0 | | ■ | ■ | ■ | | | | | | | | | | | | | | |
| 34 | Clamping spring 10mm (10x) | 0200,0400 | 8 716 771 167 0 | | ■ | ■ | ■ | | | | | | | | | | | | | | |
| 35 | Screw m4 x 12mm taptite zc pl ph | | 2 914 411 404 0 | | ■ | ■ | ■ | | | | | | | | | | | | | | |
| 36 | Clip flow sensor | 0200,0400 | 8 716 106 488 0 | | ■ | ■ | ■ | | | | | | | | | | | | | | |
| 37 | O-ring 22x3 EPDM (10x) | 0200,0400 | 8 716 106 747 0 | | ■ | ■ | ■ | | | | | | | | | | | | | | |
| 38 | Adapter | 0200,0400 | 8 716 111 797 0 | | ■ | ■ | ■ | | | | | | | | | | | | | | |
| 39 | Silencer | 0200,0400 | 8 716 011 756 0 | | ■ | ■ | ■ | | | | | | | | | | | | | | |
| 40 | Flow limiter insert 14lt | | 8 716 107 887 0 | | | | ■ | | | | | | | | | | | | | | |
| 40 | Flow limiter insert 10lt | 0400 | 8 716 141 057 0 | | ■ | | | | | | | | | | | | | | | | |
| 40 | Flow regulator type E-W 12 l/min red | 0200 | 8 716 141 061 0 | | | ■ | | | | | | | | | | | | | | | |
| 41 | Flow sensor adaptor | 0200,0400 | 8 716 112 491 0 | | ■ | ■ | ■ | | | | | | | | | | | | | | |
| 42 | Turbine | 0200,0400 | 8 717 002 132 0 | | ■ | ■ | ■ | | | | | | | | | | | | | | |
| 43 | Flow pipe | 0200 | 8 716 010 808 0 | | | ■ | ■ | | | | | | | | | | | | | | |
| 43 | Flow pipe | 0400 | 8 716 012 654 0 | | ■ | | ■ | | | | | | | | | | | | | | |
| 44 | Filter dcw | 0200,0400 | 8 716 106 486 0 | | ■ | ■ | ■ | | | | | | | | | | | | | | |
| 45 | Washer 18.6 X 13.5 X 1.5 (10x) | | 8 710 103 045 0 | | ■ | ■ | ■ | | | | | | | | | | | | | | |

**NGVA24/28/35-4H**
**NGVS24/28/35-4H**

Pump/Tubes
Pumpe/Rohre
Pompe/Tubes
Pompa/Raccordi
Bomba/Tubos
Pomp/Pijps

**5A**

| Spare parts list<br>Ersatzteilliste | Liste des pièces de rechange<br>Lista parti di ricambio | Lista de repuestos<br>Onderdelenlijst |
|---|---|---|

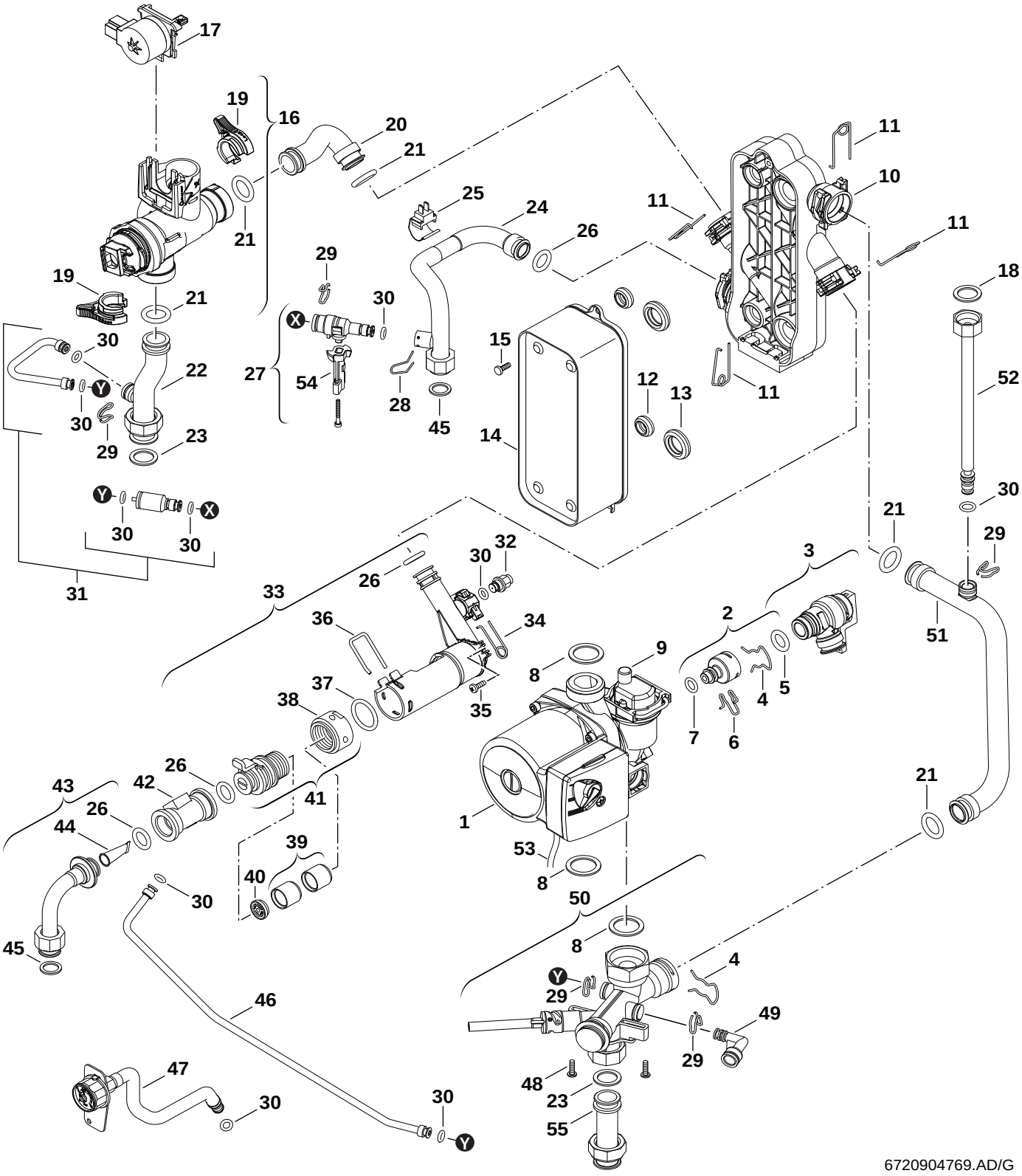


| | |
|---|---|
| **5** **A** Pump/Tubes<br>Pumpe/Rohre<br>Pompe/Tubes<br>Pompa/Raccordi<br>Bomba/Tubos<br>Pomp/Pijps | **NGVA24/28/35-4H**<br>**NGVS24/28/35-4H** |

| Pos | description<br>Bezeichnung<br>dénomination<br>descrizioni<br>descripción<br>benaming | S-Nr | Ordering no.<br>Bestell-Nr.<br>Numero de commande<br>n° d'ordine<br>Número el ordenar<br>Bestelnummer | gas type<br>Gasart<br>type gaz<br>tipo gas<br>tipo gas<br>gassoorte | NGVA24 | NGVA28 | NGVA35 | | | | | | | | | | | | | | Remarks<br>Bemerkungen<br>Remarques<br>Osservazioni<br>Observaciones<br>Opmerkingen |
|---|---|---|---|---|---|---|---|---|---|---|---|---|---|---|---|---|---|---|---|---|---|
| 46 | Pipe | 0200 | 8 716 010 804 0 | | | ■ | ■ | | | | | | | | | | | | | | |
| 46 | Pipe | 0400 | 8 716 012 706 0 | | ■ | | ■ | | | | | | | | | | | | | | |
| 47 | Manometer | | 8 716 011 067 0 | | ■ | ■ | ■ | | | | | | | | | | | | | | |
| 48 | Screw (10x) | | 2 914 211 304 0 | | ■ | ■ | ■ | | | | | | | | | | | | | | |
| 49 | Elbow | | 8 716 010 785 0 | | ■ | ■ | ■ | | | | | | | | | | | | | | |
| 50 | Return pipe distribution | | 8 716 012 801 0 | | ■ | ■ | ■ | | | | | | | | | | | | | | |
| 51 | Pipe | 0200,0400 | 8 716 010 795 0 | | ■ | ■ | ■ | | | | | | | | | | | | | | |
| 52 | Flexible tube | 0200,0400 | 8 716 013 607 0 | | ■ | ■ | ■ | | | | | | | | | | | | | | |
| 53 | Cable | | 8 714 401 896 0 | | ■ | ■ | ■ | | | | | | | | | | | | | | |
| 54 | Handle | 0400 | 8 716 012 555 0 | | | ■ | ■ | | | | | | | | | | | | | | |
| 54 | Handle | 0400 | 8 719 905 518 0 | | ■ | | | | | | | | | | | | | | | | |
| 55 | Filling loop | 0400 | 8 716 011 748 0 | | ■ | | ■ | | | | | | | | | | | | | | |
| 55 | Pipe | 0200 | 8 716 012 666 0 | | | ■ | ■ | | | | | | | | | | | | | | |

**NGVA24/28/35-4H**
**NGVS24/28/35-4H**

Pump/Tubes
Pumpe/Rohre
Pompe/Tubes
Pompa/Raccordi
Bomba/Tubos
Pomp/Pijps

**5A**

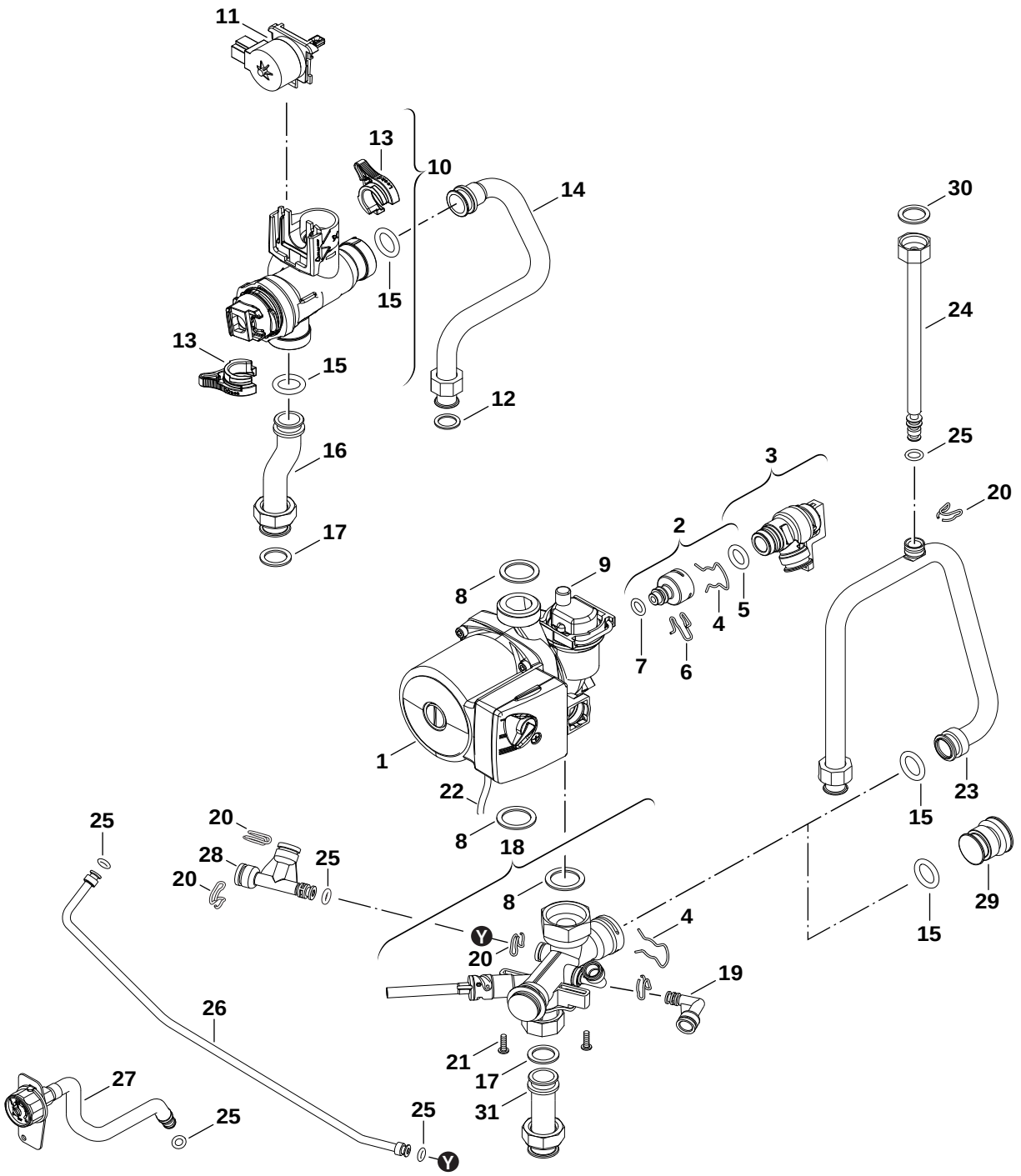


6720904780.AA/G

| | |
|---|---|
| **5** **B** Pump/Tubes<br>Pumpe/Rohre<br>Pompe/Tubes<br>Pompa/Raccordi<br>Bomba/Tubos<br>Pomp/Pijps | **NGVA24/28/35-4H**<br>**NGVS24/28/35-4H** |

| Pos | description<br>Bezeichnung<br>dénomination<br>descrizioni<br>descripción<br>benaming | S-Nr | Ordering no.<br>Bestell-Nr.<br>Numero de commande<br>n° d'ordine<br>Número el ordenar<br>Bestelnummer | gas type<br>Gasart<br>type gaz<br>tipo gas<br>tipo gas<br>gassoorte | NGVS24 | NGVS28 | NGVS35 | | | | | | | | | | | | | | Remarks<br>Bemerkungen<br>Remarques<br>Osservazioni<br>Observaciones<br>Opmerkingen |
|---|---|---|---|---|---|---|---|---|---|---|---|---|---|---|---|---|---|---|---|---|---|
| 1 | Pump | 0200 | 8 716 010 791 0 | | | | ■ | | | | | | | | | | | | | | |
| 1 | Pump | 0400 | 8 716 010 880 0 | | ■ | | | | | | | | | | | | | | | | |
| 1 | Pump | 0200 | 8 716 011 394 0 | | | ■ | | | | | | | | | | | | | | | |
| 2 | Adapter | | 8 716 010 793 0 | | ■ | ■ | ■ | | | | | | | | | | | | | | |
| 3 | Safety relief valve | | 8 716 010 876 0 | | ■ | ■ | ■ | | | | | | | | | | | | | | |
| 4 | Wireform spring | | 8 711 200 016 0 | | ■ | ■ | ■ | | | | | | | | | | | | | | |
| 5 | O-ring | | 8 716 771 597 0 | | ■ | ■ | ■ | | | | | | | | | | | | | | |
| 6 | Wireform spring (10x) | | 8 714 707 024 0 | | ■ | ■ | ■ | | | | | | | | | | | | | | |
| 7 | O-ring (10x) | | 8 710 205 090 0 | | ■ | ■ | ■ | | | | | | | | | | | | | | |
| 8 | Washer | | 8 710 103 164 0 | | ■ | ■ | ■ | | | | | | | | | | | | | | |
| 9 | Automatic purger | | 8 718 505 039 0 | | ■ | ■ | ■ | | | | | | | | | | | | | | |
| 10 | 3-way valve | 0200,0400 | 8 716 010 801 0 | | ■ | ■ | ■ | | | | | | | | | | | | | | |
| 11 | Motor | 0200,0400 | 8 716 011 360 0 | | ■ | ■ | ■ | | | | | | | | | | | | | | |
| 12 | Washer 18.6 X 13.5 X 1.5 (10x) | | 8 710 103 045 0 | | ■ | ■ | ■ | | | | | | | | | | | | | | |
| 13 | Clip | | 8 716 010 800 0 | | ■ | ■ | ■ | | | | | | | | | | | | | | |
| 14 | Flow pipe | 0200,0400 | 8 716 012 710 0 | | ■ | ■ | ■ | | | | | | | | | | | | | | |
| 15 | O-ring 17x4 (10x) | | 8 716 771 154 0 | | ■ | ■ | ■ | | | | | | | | | | | | | | |
| 16 | Flow pipe | 0200,0400 | 8 716 012 709 0 | | ■ | ■ | ■ | | | | | | | | | | | | | | |
| 17 | Fibre washer 23.9 X 17.2 X 1.5 (10x) | | 8 710 103 043 0 | | ■ | ■ | ■ | | | | | | | | | | | | | | |
| 18 | Return pipe distribution | | 8 716 012 801 0 | | ■ | ■ | ■ | | | | | | | | | | | | | | |
| 19 | Elbow | | 8 716 010 785 0 | | ■ | ■ | ■ | | | | | | | | | | | | | | |
| 20 | Clip (10x) | | 8 719 905 335 0 | | ■ | ■ | ■ | | | | | | | | | | | | | | |
| 21 | Screw (10x) | | 2 914 211 304 0 | | ■ | ■ | ■ | | | | | | | | | | | | | | |
| 22 | Cable | | 8 714 401 896 0 | | ■ | ■ | ■ | | | | | | | | | | | | | | |
| 23 | Flow pipe | 0200,0400 | 8 716 012 780 0 | | ■ | ■ | ■ | | | | | | | | | | | | | | |
| 24 | Flexible tube | 0200,0400 | 8 716 011 039 0 | | ■ | ■ | ■ | | | | | | | | | | | | | | |
| 25 | O-ring 6x2,5 (10x) | | 8 716 771 164 0 | | ■ | ■ | ■ | | | | | | | | | | | | | | |
| 26 | Pipe | 0200,0400 | 8 716 012 706 0 | | ■ | ■ | ■ | | | | | | | | | | | | | | |
| 27 | Manometer | | 8 716 011 067 0 | | ■ | ■ | ■ | | | | | | | | | | | | | | |
| 30 | Washer (10X) | 0200,0400 | 8 710 103 121 0 | | ■ | ■ | ■ | | | | | | | | | | | | | | |
| 31 | Pipe | 0200,0400 | 8 716 012 666 0 | | ■ | ■ | ■ | | | | | | | | | | | | | | |
| | Conversion kit ZC ----> ZSC ACC NO: | 0200,0400 | 7 719 003 115 | | ■ | ■ | ■ | | | | | | | | | | | | | | |

**NGVA24/28/35-4H**
**NGVS24/28/35-4H**

Pump/Tubes
Pumpe/Rohre
Pompe/Tubes
Pompa/Raccordi
Bomba/Tubos
Pomp/Pijps

**5B**

| Spare parts list<br>Ersatzteilliste | Liste des pièces de rechange<br>Lista parti di ricambio | Lista de repuestos<br>Onderdelenlijst |
|---|---|---|

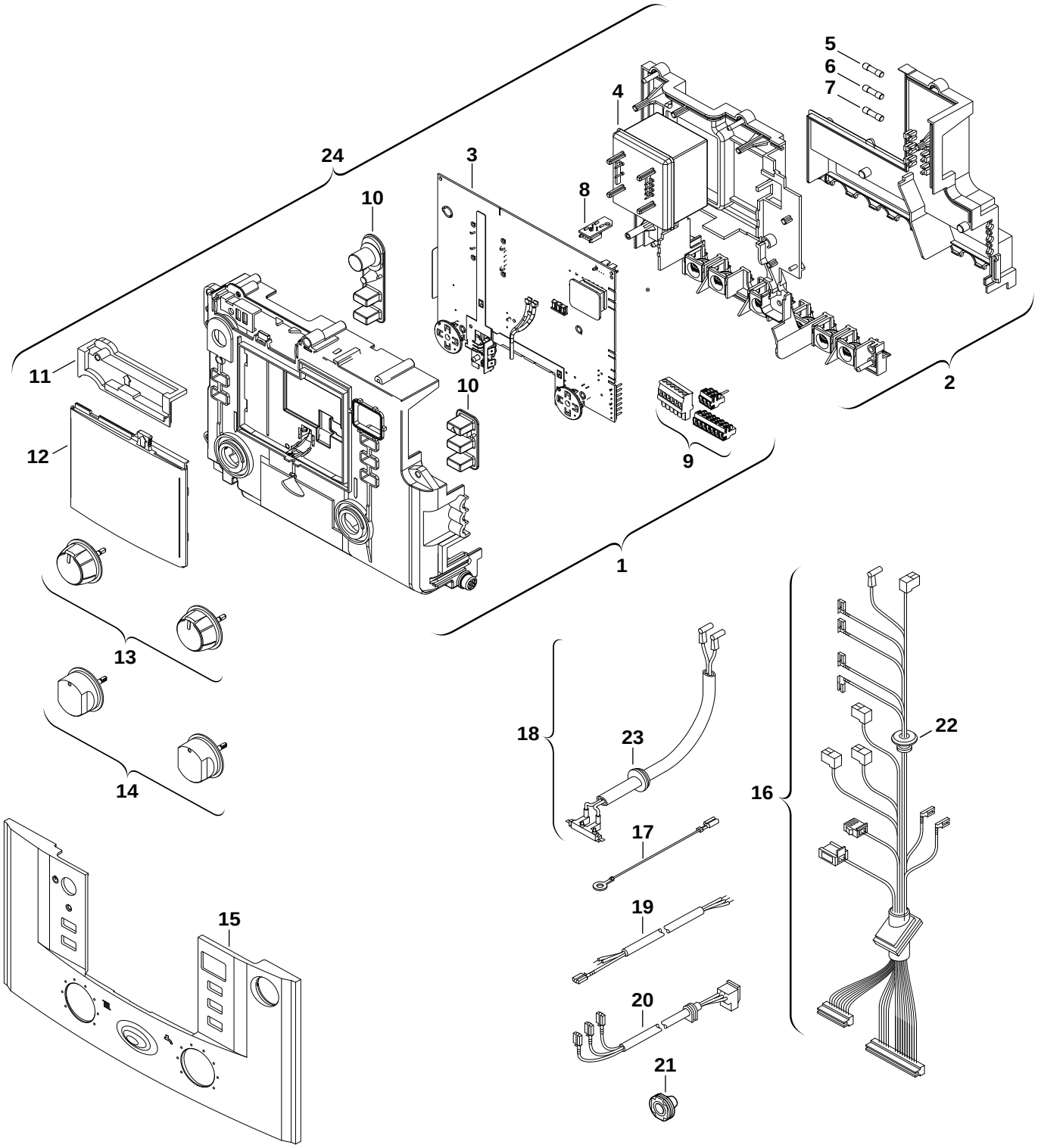


6720905454.AA/G

| | | |
|---|---|---|
| **6** | Control box<br>Schaltkasten<br>Tableau de commande<br>Quadro comandi<br>Caja de conexiones<br>Schakelkast | **NGVA24/28/35-4H**<br>**NGVS24/28/35-4H** |

| Pos | description<br>Bezeichnung<br>dénomination<br>descrizioni<br>descripción<br>benaming | S-Nr | Ordering no.<br>Bestell-Nr.<br>Numero de commande<br>n° d'ordine<br>Número el ordenar<br>Bestelnummer | gas type<br>Gasart<br>type gaz<br>tipo gas<br>tipo gas<br>gassoorte | NGVA24 | NGVA28 | NGVA35 | NGVS24 | NGVS28 | NGVS35 | | | | | | | | | | | Remarks<br>Bemerkungen<br>Remarques<br>Osservazioni<br>Observaciones<br>Opmerkingen |
|---|---|---|---|---|---|---|---|---|---|---|---|---|---|---|---|---|---|---|---|---|---|
| 1 | Upper housing | | 8 716 011 349 0 | | ■ | ■ | ■ | ■ | ■ | ■ | | | | | | | | | | | |
| 2 | Backpanel | | 8 717 207 679 0 | | ■ | ■ | ■ | ■ | ■ | ■ | | | | | | | | | | | |
| 3 | Printed circuit | 0200 | 8 716 011 348 0 | | | ■ | ■ | | ■ | ■ | | | | | | | | | | | |
| 3 | circuit board | 0400 | 8 748 300 600 0 | | ■ | ■ | ■ | ■ | ■ | | | | | | | | | | | | |
| 4 | Transformer | | 8 717 201 052 0 | | ■ | ■ | ■ | ■ | ■ | ■ | | | | | | | | | | | |
| 5 | Fusing element T2,5A (10x) | | 1 904 521 342 0 | | ■ | ■ | ■ | ■ | ■ | ■ | | | | | | | | | | | |
| 6 | Fusing element T0,5A | | 1 904 522 730 0 | | ■ | ■ | ■ | ■ | ■ | ■ | | | | | | | | | | | |
| 7 | Fusing element T1,6A | | 1 904 522 740 0 | | ■ | ■ | ■ | ■ | ■ | ■ | | | | | | | | | | | |
| 8 | Code plug 1504 | 0400 | 8 714 431 504 0 | 23 | | ■ | | | ■ | | | | | | | | | | | | |
| 8 | Code plug 1505 | 0400 | 8 714 431 505 0 | 31 | | ■ | | | ■ | | | | | | | | | | | | |
| 8 | Code Plug 1524 | 0200 | 8 714 431 524 0 | 23 | | ■ | | | ■ | | | | | | | | | | | | |
| 8 | Code Plug 1525 | 0200 | 8 714 431 525 0 | 31 | | ■ | | | ■ | | | | | | | | | | | | |
| 8 | Code Plug 1530 | 0200 | 8 714 431 530 0 | 23 | | | ■ | | | ■ | | | | | | | | | | | |
| 8 | Code Plug 1531 | 0200 | 8 714 431 531 0 | 31 | | | ■ | | | ■ | | | | | | | | | | | |
| 8 | Code Plug 1540 | 0400 | 8 714 431 540 0 | 23 | ■ | | | ■ | | | | | | | | | | | | | |
| 8 | Code Plug 1541 | 0400 | 8 714 431 541 0 | 31 | ■ | | | ■ | | | | | | | | | | | | | |
| 8 | Code Plug 1544 | 0400 | 8 714 431 544 0 | 23 | | | ■ | | | | | | | | | | | | | | |
| 8 | Code Plug 1545 | 0400 | 8 714 431 545 0 | 31 | | | ■ | | | | | | | | | | | | | | |
| 9 | Set of plugs | | 8 714 404 348 0 | | ■ | ■ | ■ | ■ | ■ | ■ | | | | | | | | | | | |
| 10 | Switch | | 8 716 011 350 0 | | ■ | ■ | ■ | ■ | ■ | ■ | | | | | | | | | | | |
| 11 | Cover | | 8 717 207 680 0 | | ■ | ■ | ■ | ■ | ■ | ■ | | | | | | | | | | | |
| 12 | Shield | | 8 711 000 302 0 | | ■ | ■ | ■ | ■ | ■ | ■ | | | | | | | | | | | |
| 13 | Rotary handle | 0200 | 8 712 000 129 0 | | | ■ | ■ | | ■ | ■ | | | | | | | | | | | |
| 13 | Rotary handle | 0400 | 8 716 011 785 0 | | ■ | | | | | | | | | | | | | | | | |
| 14 | Rotary handle | 0400 | 8 716 011 785 0 | | | ■ | ■ | ■ | | | | | | | | | | | | | |
| 15 | Cover | 0200 | 8 716 011 779 0 | | | ■ | ■ | | ■ | ■ | | | | | | | | | | | |
| 15 | Cover | 0400 | 8 716 011 862 0 | | ■ | ■ | ■ | ■ | ■ | | | | | | | | | | | | |
| 16 | Cable tree | 0400 | 8 716 011 046 0 | | | ■ | | | | | | | | | | | | | | | |
| 16 | Cable tree | 0200 | 8 716 011 077 0 | | | ■ | | | | | | | | | | | | | | | |
| 16 | Cable tree | 0200 | 8 716 011 078 0 | | | | | | ■ | | | | | | | | | | | | |
| 16 | Cable tree | 0400 | 8 716 011 080 0 | | | | | ■ | ■ | | | | | | | | | | | | |
| 16 | Cable tree | 0200 | 8 716 011 477 0 | | | | ■ | | | | | | | | | | | | | | |
| 16 | Cable tree | 0200 | 8 716 011 478 0 | | | | | | | ■ | | | | | | | | | | | |
| 16 | Cable tree | 0400 | 8 716 011 479 0 | | | | ■ | | | | | | | | | | | | | | |
| 16 | Cable tree | 0400 | 8 716 011 796 0 | | ■ | | | | | | | | | | | | | | | | |
| 17 | Cable | | 8 716 011 051 0 | | ■ | ■ | ■ | ■ | ■ | ■ | | | | | | | | | | | |
| 18 | Cable | 0200 | 8 716 011 596 0 | | | | ■ | | | ■ | | | | | | | | | | | |
| 18 | Ignition lead | 0200,0400 | 8 716 012 157 0 | | ■ | ■ | | ■ | ■ | | | | | | | | | | | | |
| 19 | Power supply cord | 0400 | 8 704 401 032 0 | | | ■ | | | ■ | | | | | | | | | | | | |
| 19 | Cable | 0200,0400 | 8 719 905 576 0 | | ■ | ■ | ■ | ■ | ■ | ■ | | | | | | | | | | | |
| 20 | Centrifugal blower cables | 0400 | 8 716 010 834 0 | | ■ | ■ | ■ | ■ | ■ | | | | | | | | | | | | |
| 20 | Harness - fan | 0200 | 8 716 102 133 0 | | | ■ | ■ | | ■ | ■ | | | | | | | | | | | |
| 21 | Cord strain relief Bush | | 8 716 141 102 0 | | ■ | ■ | ■ | ■ | ■ | ■ | | | | | | | | | | | |
| 22 | Grommet set | | 8 710 203 039 0 | | ■ | ■ | ■ | ■ | ■ | ■ | | | | | | | | | | | |
| 23 | Rubber grommet set | | 8 710 303 068 0 | | ■ | ■ | ■ | ■ | ■ | ■ | | | | | | | | | | | |
| 24 | Control unit | 0200 | 8 717 207 759 0 | | | ■ | ■ | | ■ | ■ | | | | | | | | | | | |

**NGVA24/28/35-4H**
**NGVS24/28/35-4H**

Control box
Schaltkasten
Tableau de commande
Quadro comandi
Caja de conexiones
Schakelkast

**6**

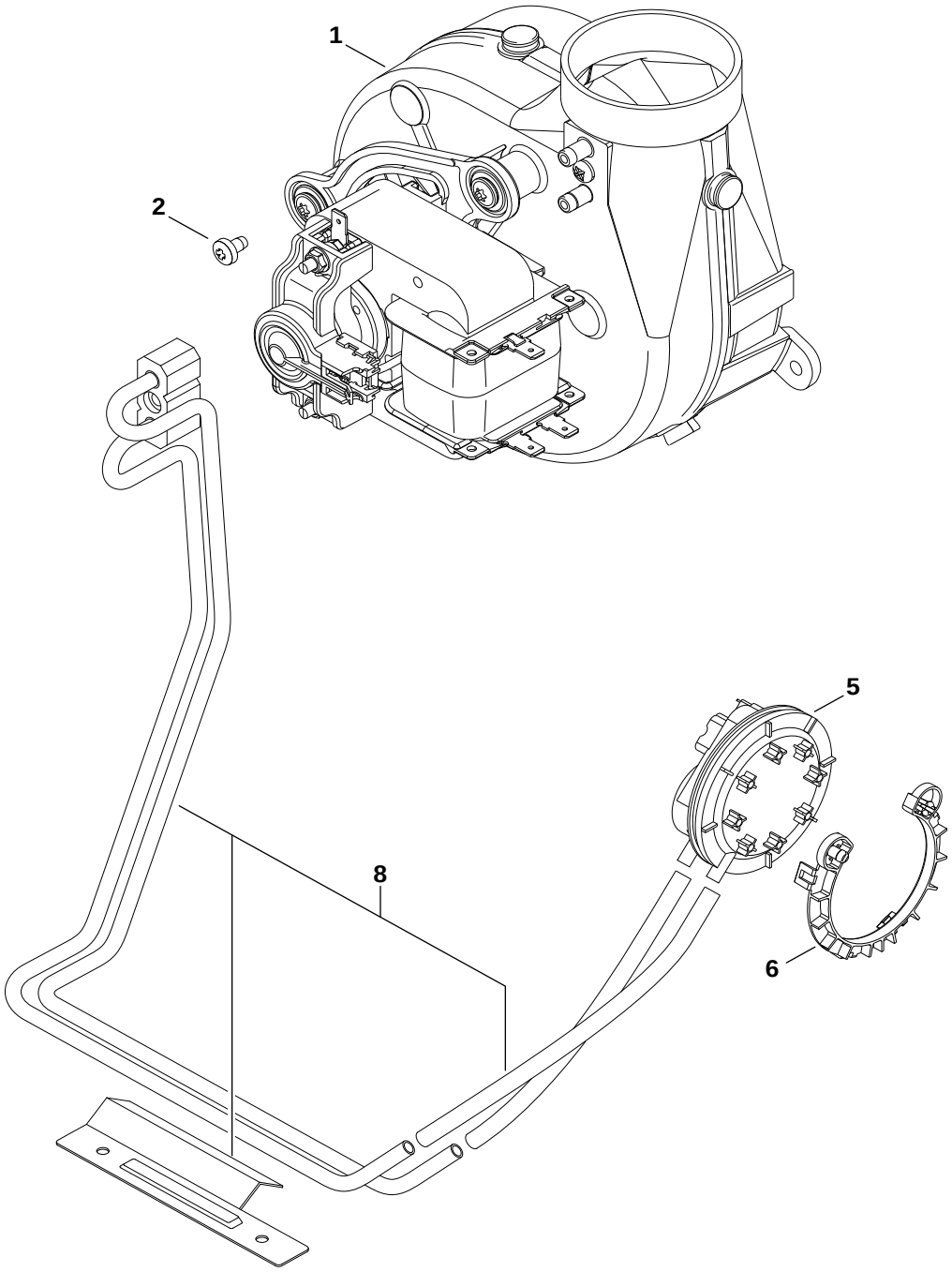


6720904771.AD/G

| | | |
|---|---|---|
| **7** | Fan<br>Gebläse<br>Ventilateur<br>Ventilatore<br>Ventilador<br>Ventilador | **NGVA24/28/35-4H**<br>**NGVS24/28/35-4H** |

| Pos | description<br>Bezeichnung<br>dénomination<br>descrizioni<br>descripción<br>benaming | S-Nr | Ordering no.<br>Bestell-Nr.<br>Numero de commande<br>n° d'ordine<br>Número el ordenar<br>Bestelnummer | gas type<br>Gasart<br>type gaz<br>tipo gas<br>tipo gas<br>gassoorte | NGVA24 | NGVA28 | NGVA35 | NGVS24 | NGVS28 | NGVS35 | | | | | | | | | | | Remarks<br>Bemerkungen<br>Remarques<br>Osservazioni<br>Observaciones<br>Opmerkingen |
|---|---|---|---|---|---|---|---|---|---|---|---|---|---|---|---|---|---|---|---|---|---|
| 1 | Fan | 0400 | 8 716 011 288 0 | | | | ■ | | | | | | | | | | | | | | |
| 1 | Fan | 0400 | 8 716 011 297 0 | | ■ | ■ | | ■ | ■ | | | | | | | | | | | | |
| 1 | Fan | 0200 | 8 716 011 708 0 | | | ■ | ■ | | ■ | ■ | | | | | | | | | | | |
| 2 | Screw | | 8 716 011 481 0 | | ■ | ■ | ■ | ■ | ■ | ■ | | | | | | | | | | | |
| 5 | Pressure differential | 0200 | 8 716 011 794 0 | | | ■ | ■ | | ■ | ■ | | | | | | | | | | | |
| 5 | Pressure differential | 0400 | 8 716 012 753 0 | | ■ | | | ■ | | | | | | | | | | | | | |
| 5 | Pressure differential | 0400 | 8 716 761 611 0 | | | ■ | ■ | | ■ | | | | | | | | | | | | |
| 6 | Air pressure switch bracket | | 8 716 011 377 0 | | ■ | ■ | ■ | ■ | ■ | ■ | | | | | | | | | | | |
| 8 | Pipe condensation field fix | | 8 718 641 794 0 | | ■ | ■ | ■ | ■ | ■ | ■ | | | | | | | | | | | |

**NGVA24/28/35-4H**
**NGVS24/28/35-4H**

Fan
Gebläse
Ventilateur
Ventilatore
Ventilador
Ventilador

**7**

**List of translations**
**Übersetzungsliste**

**Liste des traductions**
**Traduzione delle descrizioni**

**Lista de traducciones**
**Vertalinglijst**

| Pos | Beschreibung | Denomination | Descrizione | Descripción | Benaming |
|---|---|---|---|---|---|
| **1** | **Baugruppe** | **Groupe de construction** | **Gruppo di construzione** | **Grupo de construccion** | **Montagegroep** |
| 1 | Mantel | Habillage | Mantello | Carcasa | Mantel |
| 2 | Warenzeichen | Marquage | Targhetta | Marca | Fabrieksmerk |
| 3 | Rahmen | Cadre-support | Conice | Respaldo | Frame |
| 4 | Daempfer-Set (2x) | Amortisseur (2x) | Ammortizzatore (2x) | Amortiguador (2x) | Domper (2x) |
| 5 | Verschluß (1x) | Serrure (1x) | Chiusura (1x) | Cerradura (1x) | Afsluiting (1x) |
| 6 | Blende | Cache | Mascherina | Chapa cuadro | Paneel |
| 7 | Schraube (10x) | Vis (10x) | Vite (10x) | Tornillo (10x) | Schroef (10x) |
| 8 | Deckel | Couvercle | Coperchio nero | Tapa | Deksel |
| 9 | Dichtung | Joint | Guarnizione | Junta | Afdichting |
| 10 | Brennkammer | Chambre de combustion | Camera combustione | Cámara de quemadores | Verbrandingskamer |
| 11 | Schraube (10x) | Vis (10x) | Vite (10x) | Tornillo (10x) | Schroef (10x) |
| 12 | Isoliersatz | Jeu d´isolation | Set isolante | Conjunto de aislamiento | Isolatieset |
| 13 | Schraube | Vis | Vite | Tornillo | Schroef |
| 14 | Abgassammler | Coupe tirage antirefouleur | Cappa fumi | Seguro evacuación de gases | Valwindafleider |
| 15 | Halter | Support | Angolare | Soporte | Houder |
| 16 | Befestigungswinkel | Equerre | Angolare | Angulo | Bevestigingshoek |
| 17 | Feder | Ressort | Molla | Clip de fijación | Klemveer |
| 18 | Schraube | Vis | Vite | Tornillo | Schroef |
| 19 | Halter | Support | Angolare | Soporte | Houder |
| 20 | Schraube (10x) | Vis (10x) | Vite (10x) | Tornillo (10x) | Schroef (10x) |
| 21 | Montagerahmen | Cadre de montage | Rifinitura montaggio | Estructura de montaje | Montageraam |
| 22 | Befestigungsblech | Tôle de protection | Copertura | Chapa de protección | Bevestigingsplaat |
| 23 | Halter | Support | Angolare | Soporte | Houder |
| 24 | Schraube (10x) | Vis (10x) | Vite (10x) | Tornillo (10x) | Schroef (10x) |
| 25 | Befestigungswinkel | Equerre | Angolare | Angulo | Bevestigingshoek |
| 26 | Schraube (10x) | Vis (10x) | Vite (10x) | Tornillo (10x) | Schroef (10x) |
| 27 | Halterung | Support | Supporto | Sujeción | Houder |
| 28 | Ausdehnungsgefäß | Vase d'expansion | Vaso di espansione | Vaso de expansión | Expansievat |
| 29 | Strebe | Support | Traversa | Angolo soporto | Steun |
| 30 | Drosselblende (Ø80,Ø82,Ø85,Ø90) | Restriction de débit (Ø80,Ø82,Ø85,Ø90) | Disco strozzamento (Ø80,Ø82,Ø85,Ø90) | Disco de estrangulación Ø80,Ø82,Ø85,Ø90 | Restrictie (Ø80,Ø82,Ø85,Ø90) |
| 31 | Schraube (10x) | Vis (10x) | Vite (10x) | Tornillo (10x) | Schroef (10x) |
| 32 | Adapter 80/110 | Adaptateur 80/110 | Adattore 80/110 | Adaptador 80/110 | Adapter 80/110 |
| **2** | **Baugruppe** | **Groupe de construction** | **Gruppo di construzione** | **Grupo de construccion** | **Montagegroep** |
| 1 | Wärmetauscher | Echangeur de chaleur | Scambiatore di calore | Intercambiador de calor | Warmtewisselaar |
| 2 | Rohr | Tube | Tubo | Tubo | Pijp |
| 3 | Rohr | Tube | Tubo | Tubo | Pijp |
| 4 | Dichtscheibe 1/2" (10x) | Joint 1/2" (10x) | Guarnizione 1/2" (10x) | Junta 1/2" (10x) | Afdichting 1/2" (10x) |
| 5 | O-Ring 17x4 (10x) | JOINT TORIQUE 17x4 (10x) | Anello tenuta 17x4 (10x) | Anillo tórico 17x4 (10x) | O-ring 17x4 (10x) |
| 6 | Klammer | Clip | Graffa | Grapa | Klem |
| 7 | Dichtscheibe(10x) | Joint(10x) | Guarnizione(10x) | Junta(10x) | Afdichting(10x) |
| 8 | Temperaturfühler NTC | Sonde de temperature CTN | Sensore termometrico NTC | Sensor de temperatura NTC | Temperatuurvoeler NTC |
| 9 | Schraube M2,9x6,5 (10x) | Vis M2,9x6,5 (10x) | Vite M2,9x6,5 (10x) | Tornillo M2,9x6,5 (10x) | Schroef M2,9x6,5 (10x) |
| 10 | Temperaturbegrenzer | Limiteur de température | Limitatore temperatura | Limitador de temperatura | Temperatuurbegrenzer |
| 14 | Rohr | Tube | Tubo | Tubo | Pijp |
| 15 | O-Ring 6x2,5 (10x) | O-ring 6 x2,5 (10x) | Anello tenuta 6x2,5 (10x) | Anillo tórico 6x2,5 (10x) | O-ring 6x2,5 (10x) |
| 16 | Tülle | Raccord tuyau souple | Guarnizione | Abrazadera de goma | Rubberen tule |
| **3A** | **Baugruppe** | **Groupe de construction** | **Gruppo di construzione** | **Grupo de construccion** | **Montagegroep** |
| 1 | Brenner | Brûleur | Bruciatore | Quemador | Brander |
| 2 | Düse (115) (10x) | Injecteur (115) (10x) | Ugello (115) (10x) | Tobera (115) (10x) | Spuitstuk (115) (10x) |
| 3 | Schraube (10x) | Vis (10x) | Vite (10x) | Tornillo (10x) | Schroef (10x) |
| 4 | Schraube (10x) | Vis (10x) | Vite (10x) | Tornillo (10x) | Schroef (10x) |
| 5 | Halter | Support | Angolare | Soporte | Houder |
| 6 | Überzündbrücke | Tôle d´interallumage | Ponte accensione | Rampa de encendido | Ontstekingsbrug |
| 7 | Haltewinkel (10x) | Tole fixation (10x) | Angolare (10x) | Angulo soporte (10x) | Steunhoek (10x) |
| 8 | Schraube (10x) | Vis (10x) | Vite (10x) | Tornillo (10x) | Schroef (10x) |
| 9 | Anschlussstück | Raccord | Raccordo di collegamento | Racor | Aansluit stuk |

**List of translations**
**Übersetzungsliste**

**Liste des traductions**
**Traduzione delle descrizioni**

**Lista de traducciones**
**Vertalinglijst**

| Pos | Beschreibung | Denomination | Descrizione | Descripción | Benaming |
|---|---|---|---|---|---|
| 10 | Druckmeßnippel | Prise de pression | Presa pressione | Toma de presión | Drukmeetnippel |
| 11 | Dichtung (10x) | Joint (10x) | Guarnizione (10x) | Junta (10x) | Pakking (10x) |
| 12 | Elektrodensatz | Jeu d´électrodes | Set di elettrodi | Conjunto electrodo | Elektrodenset |
| 13 | Dichtscheibe 1" (10x) | Joint 1" (10x) | Guarnizione 1" (10x) | Junta 1" (10x) | Afdichting 1" (10x) |
| | Gasart-Umbausatz (==>G20,20mbar) | Kit de transformation de gaz (==>G20,20m | Kit conversione gas (==>G20,20mbar) | Kit de conversión de gas (==>G20,20mbar) | Gasombouwset (==>G20,20mbar) |
| | Gasart-Umbausatz (==>G30,30 / 37mbar) | Kit de transformation de gaz (==>G30,30 | Kit conversione gas (==>G30,30 / 37mbar) | Kit de conversión de gas (==>G30,30 / 37 | Gasombouwset (==>G30,30 / 37mbar) |
| | Gasart-Umbausatz (==>G20,20mbar) | Kit de transformation de gaz (==>G20,20m | Kit conversione gas (==>G20,20mbar) | Kit de conversión de gas (==>G20,20mbar) | Gasombouwset (==>G20,20mbar) |
| | Gasart-Umbausatz (==>G30,37mbar) | Kit de transformation de gaz (==>G30,37m | Kit conversione gas (==>G30,37mbar) | Kit de conversión de gas (==>G30,37mbar) | Gasombouwset (==>G30,37mbar) |
| | Gasart-Umbausatz (G20==>G230) | Kit de transformation de gaz (G20==>G230 | Kit conversione gas(G20==>G230) | Kit de conversión de gas (G20==>G230) | Gasombouwset (G20==>G230) |
| | Gasart-Umbausatz (==>G20,) | Kit de transformation de gaz (==>G20,) | Kit conversione gas (==>G20,) | Kit de conversión de gas (==>G20,) | Gasombouwset (==>G20,) |
| **3B** | **Baugruppe** | **Groupe de construction** | **Gruppo di construzione** | **Grupo de construccion** | **Montagegroep** |
| 1 | Brenner | Brûleur | Bruciatore | Quemador | Brander |
| 2 | Elektrodensatz | Jeu d´électrodes | Set di elettrodi | Conjunto electrodo | Elektrodenset |
| 3 | Schraube (10x) | Vis (10x) | Vite (10x) | Tornillo (10x) | Schroef (10x) |
| 4 | Verteilerrohr | Rampe injecteur | Tubo distributore | Tubo distribución | Verdeelbuis |
| 5 | Schraube (10x) | Vis (10x) | Vite (10x) | Tornillo (10x) | Schroef (10x) |
| | Gasart-Umbausatz (==>G20,20mbar) | Kit de transformation de gaz (==>G20,20m | Kit conversione gas (==>G20,20mbar) | Kit de conversión de gas (==>G20,20mbar) | Gasombouwset (==>G20,20mbar) |
| | Gasart-Umbausatz (==>G30,30mbar) | Kit de transformation de gaz (==>G30,30m | Kit conversione gas (==>G30,30mbar) | Kit de conversión de gas (==>G30,30mbar) | Gasombouwset (==>G30,30mbar) |
| | Gasart-Umbausatz (G20==>G230) | Kit de transformation de gaz (G20==>G230 | Kit conversione gas(G20==>G230) | Kit de conversión de gas (G20==>G230) | Gasombouwset (G20==>G230) |
| | Gasart-Umbausatz (==>G20,) | Kit de transformation de gaz (==>G20,) | Kit conversione gas (==>G20,) | Kit de conversión de gas (==>G20,) | Gasombouwset (==>G20,) |
| | Gasart-Umbausatz (==>G30,) | Kit de transformation de gaz (==>G30,) | Kit conversione gas (==>G30,) | Kit de conversión de gas (==>G30,) | Gasombouwset (==>G30,) |
| **4** | **Baugruppe** | **Groupe de construction** | **Gruppo di construzione** | **Grupo de construccion** | **Montagegroep** |
| 1 | Gasarmatur | Bloc gaz | Gruppo gas | Cuerpo de gas | Gasregelblok |
| 2 | Gaszuführungsrohr | Tube arrivée gaz | Tubo gas | Tubo de entrada de gas | Gastoevoerpijp |
| 3 | Dichtscheibe 3/4" (10x) | Joint 3/4" (10x) | Guarnizione 3/4" (10x) | Junta 3/4" (10x) | Afdichting 3/4" (10x) |
| 4 | Stütze | Support | Sostegno | Soporte | Stuts |
| 5 | Schraube (10x) | Vis (10x) | Vite (10x) | Tornillo (10x) | Schroef (10x) |
| 6 | Schraube | Vis | Vite | Tornillo | Schroef |
| 7 | Flachdichtung (10x) | Joint plat (10x) | Guarnizione ad anello piano (10x) | Junta plana (10x) | Vlakafdichting (10x) |
| 8 | Gasrohr | Tube gaz | Tubo gas | Tubo de gas | Gaspijp |
| 9 | Dichtscheibe 1" (10x) | Joint 1" (10x) | Guarnizione 1" (10x) | Junta 1" (10x) | Afdichting 1" (10x) |
| **5A** | **Baugruppe** | **Groupe de construction** | **Gruppo di construzione** | **Grupo de construccion** | **Montagegroep** |
| 1 | Pumpe | Circulateur | Pompa | Bomba ZWC35/35 | Pomp |
| 2 | Adapter | Raccord | Adattore | Adaptador | Adapter |
| 3 | Sicherheitsventil | Soupape de sécurité | Valvola sicurezza | Válvula de sobrepresión | Veiligheidsklep |
| 4 | Haltefeder (10x) | Epingle (10x) | Molla (10x) | Clip de fijacion (10x) | Borgveer (10x) |
| 5 | O-Ring (10x) | Joint torique (10x) | Anello tenuta (10x) | Anillo tórico (10x) | O-ring (10x) |
| 6 | Haltefeder (10x) | Epingle (10x) | Molla (10x) | Clip de fijacion (10x) | Borgveer (10x) |
| 7 | O-Ring (10x) | Joint torique (10x) | Anello tenuta (10x) | Anillo tórico (10x) | O-ring (10x) |
| 8 | Dichtscheibe(10x) | Joint(10x) | Guarnizione(10x) | Junta(10x) | Afdichting(10x) |
| 9 | Schnellentlüfter | Purgeur | Valvola sfiato aria | Purgador | Vlotterontluchter |
| 10 | Unterteil | Support | Parte inferiore | Parte inferior | Onderdeel |
| 11 | Ressort 18 mm (10x) | Epingle 18 mm (x10) | Fermo a molla 18 mm (x10) | Clip de fijación 18 mm (x10) | Borgveer 18 mm (x10) |
| 12 | Dichtung (10x) | Joint (10x) | Guarnizione (10x) | Junta (10x) | Afdichting (10x) |
| 13 | Dichtung (10x) | Joint (x10) | Guarnizione (10x) | Junta (10x) | Afdichting (10x) |
| 14 | Wärmetauscher | Echangeur de chaleur | Scambiatore di calore | Intercambiador de calor | Warmtewisselaar |
| 15 | Schraube M5x30 mit Scheibe | Vis avec joint M5x30 | Set di fissaggio M5x30 | Juego piezas de fijacion M5x30 | Bevestigingsset M5x30 |
| 16 | 3-Wegeventil | 3-voies vanne | 3-vie valvola | 3-vías válvula | 3-wegklep |
| 17 | Motor | Servomoteur | Motore | Motor | Motor |
| 18 | Dichtscheibe (10X) | Joint (10X) | Guarnizione (10X) | Junta (10X) | Afdichting (10X) |
| 19 | Klammer | Clip | Graffa | Grapa | Klem |
| 20 | Rohr | Tube | Tubo | Tubo | Pijp |
| 21 | O-Ring 17x4 (10x) | JOINT TORIQUE 17x4 (10x) | Anello tenuta 17x4 (10x) | Anillo tórico 17x4 (10x) | O-ring 17x4 (10x) |
| 22 | Rohr | Tube | Tubo | Tubo | Pijp |
| 23 | Dichtscheibe 3/4" (10x) | Joint 3/4" (10x) | Guarnizione 3/4" (10x) | Junta 3/4" (10x) | Afdichting 3/4" (10x) |
| 24 | Anschlussrohr | Tuyauterie | Tubo di raccordo | Tubo de agua | Aansluitpijp |
| 25 | Temperaturfühler | Sonde de temperature | Sensore termometrico | Sensor de temperatura | Temperatuurvoeler |

**List of translations**
**Übersetzungsliste**

**Liste des traductions**
**Traduzione delle descrizioni**

**Lista de traducciones**
**Vertalinglijst**

| Pos | Beschreibung | Denomination | Descrizione | Descripción | Benaming |
|---|---|---|---|---|---|
| 26 | O-Ring 13,87x3,53 (10x) | Joint torique 13,87x3,53 (10x) | Anello tenuta 13,87x3,53 (10x) | Anillo tórico 13,87x3,53 (10x) | O-ring 13,87x3,53 (10x) |
| 27 | Fülleinrichtung | Dispositif remplissage | Set carico impianto | Conjunto de llenado | Vulinrichting |
| 28 | Haltefeder (10x) | Epingle (10x) | Molla (10x) | Clip de fijacion (10x) | Borgveer (10x) |
| 29 | Klammer | Clip (10x) | Graffa (10x) | Grapa (10x) | Klem (10x) |
| 30 | O-Ring 6x2,5 (10x) | O-ring 6 x2,5 (10x) | Anello tenuta 6x2,5 (10x) | Anillo tórico 6x2,5 (10x) | O-ring 6x2,5 (10x) |
| 31 | Fülleinrichtung | Dispositif remplissage | Set carico impianto | Botella de inflado | Vulinrichting |
| 32 | Überdruckventil (L) 15bar | Soupape de surppression (L) 15bar | Valvola sovrapressione (L) 15bar | Válvula de sobrepresion (L) 15bar | Overdrukveiligheid (L) 15bar |
| 33 | Turbinengehäuse | Corps de turbine | Corpo di turbina | Cuerpo de turbina | Korps van turbine |
| 34 | Haltefeder 10mm (10x) | Ressort 10mm (10x) | Molla 10mm (10x) | Clip de fijación 10mm (10x) | Klemveer 10mm (10x) |
| 35 | Schraube | Vis | Vite | Tornillo | Schroef |
| 36 | Klammer | Support | Staffa | Abrazadera | Klembeugel |
| 37 | O-Ring 22x3 EPDM (10x) | Joint torique 22x3 EPDM (10x) | Anello tenuta 22x3 EPDM (10x) | Anillo tórico 22x3 EPDM (10x) | O-ring 22x3 EPDM (10x) |
| 38 | Adapter | Raccord | Adattore | Adaptador | Adapter |
| 39 | Schalldämpfer | Silencieux | Carcassa | Silencioso | Geruisdemper |
| 40 | Durchflußbegrenzereinsatz | Insert de limiteur de débit 14lt | Inserto regolatore di flusso 14lt | Elemento de obturador 14lt | Debietbegrenzerinzetstuk 14lt |
| 41 | Adapter | Raccord | Adattore | Adaptador | Adapter |
| 42 | Turbine | Turbine | Turbina | Turbina | Turbine |
| 43 | Anschlussrohr | Tuyauterie | Tubo di raccordo | Tubo agua | Aansluitpijp |
| 44 | Filter KW | Filtre | Filtro | Filtro | Filter |
| 45 | Dichtscheibe 1/2" (10x) | Joint 1/2" (10x) | Guarnizione 1/2" (10x) | Junta 1/2" (10x) | Afdichting 1/2" (10x) |
| 46 | Rohr | Tube | Tubo | Tubo | Pijp |
| 47 | Manometer | Manomètre | Manometro | Manómetro | Manometer |
| 48 | Schraube (10x) | Vis (10x) | Vite (10x) | Tornillo (10x) | Schroef (10x) |
| 49 | Bogen | Coude | Curva | Arco | Bocht |
| 50 | Rücklaufverteiler | Tube retour distribution | Raccordo distributore | Tubo de retorno | Retourleiding verdeling |
| 51 | Rohr | Tube | Tubo | Tubo | Pijp |
| 52 | Flexschlauch | Tube flexible de raccordement sanitaire | Tubo flessibile | Tubo flexible | Flexible slang |
| 53 | Pumpenkabel | Faisceau circulateur | Cabliaggo de pompa | Cable de bomba | Pompkabel |
| 54 | Griff | Manette | Manopola | Mando del grifo | Knop |
| 55 | Fülleinrichtung | Dispositif remplissage | Set carico impianto | Botella de inflado | Vulinrichting |
| **5B** | **Baugruppe** | **Groupe de construction** | **Gruppo di construzione** | **Grupo de construccion** | **Montagegroep** |
| 1 | Pumpe | Circulateur | Pompa | Bomba ZWC35/35 | Pomp |
| 2 | Adapter | Raccord | Adattore | Adaptador | Adapter |
| 3 | Sicherheitsventil | Soupape de sécurité | Valvola sicurezza | Válvula de sobrepresión | Veiligheidsklep |
| 4 | Haltefeder (10x) | Epingle (10x) | Molla (10x) | Clip de fijacion (10x) | Borgveer (10x) |
| 5 | O-Ring (10x) | Joint torique (10x) | Anello tenuta (10x) | Anillo tórico (10x) | O-ring (10x) |
| 6 | Haltefeder (10x) | Epingle (10x) | Molla (10x) | Clip de fijacion (10x) | Borgveer (10x) |
| 7 | O-Ring (10x) | Joint torique (10x) | Anello tenuta (10x) | Anillo tórico (10x) | O-ring (10x) |
| 8 | Dichtscheibe(10x) | Joint(10x) | Guarnizione(10x) | Junta(10x) | Afdichting(10x) |
| 9 | Schnellentlüfter | Purgeur | Valvola sfiato aria | Purgador | Vlotterontluchter |
| 10 | 3-Wegeventil | 3-voies vanne | 3-vie valvola | 3-vías válvula | 3-wegklep |
| 11 | Motor | Servomoteur | Motore | Motor | Motor |
| 12 | Dichtscheibe 1/2" (10x) | Joint 1/2" (10x) | Guarnizione 1/2" (10x) | Junta 1/2" (10x) | Afdichting 1/2" (10x) |
| 13 | Klammer | Clip | Graffa | Grapa | Klem |
| 14 | Anschlussrohr | Tuyauterie | Tubo di raccordo | Tubo de agua | Aansluitpijp |
| 15 | O-Ring 17x4 (10x) | JOINT TORIQUE 17x4 (10x) | Anello tenuta 17x4 (10x) | Anillo tórico 17x4 (10x) | O-ring 17x4 (10x) |
| 16 | Anschlussrohr | Tuyauterie | Tubo di raccordo | Tubo de agua | Aansluitpijp |
| 17 | Dichtscheibe 3/4" (10x) | Joint 3/4" (10x) | Guarnizione 3/4" (10x) | Junta 3/4" (10x) | Afdichting 3/4" (10x) |
| 18 | Rücklaufverteiler | Tube retour distribution | Raccordo distributore | Tubo de retorno | Retourleiding verdeling |
| 19 | Bogen | Coude | Curva | Arco | Bocht |
| 20 | Klammer | Clip (10x) | Graffa (10x) | Grapa (10x) | Klem (10x) |
| 21 | Schraube (10x) | Vis (10x) | Vite (10x) | Tornillo (10x) | Schroef (10x) |
| 22 | Pumpenkabel | Faisceau circulateur | Cabliaggo de pompa | Cable de bomba | Pompkabel |
| 23 | Anschlussrohr | Tuyauterie | Tubo di raccordo | Tubo de agua | Aansluitpijp |
| 24 | Flexschlauch | Tube flexible de raccordement sanitaire | Tubo flessibile | Tubo flexible | Flexible slang |
| 25 | O-Ring 6x2,5 (10x) | O-ring 6 x2,5 (10x) | Anello tenuta 6x2,5 (10x) | Anillo tórico 6x2,5 (10x) | O-ring 6x2,5 (10x) |
| 26 | Rohr | Tube | Tubo | Tubo | Pijp |

**List of translations**
**Übersetzungsliste**

**Liste des traductions**
**Traduzione delle descrizioni**

**Lista de traducciones**
**Vertalinglijst**

| Pos | Beschreibung | Denomination | Descrizione | Descripción | Benaming |
|---|---|---|---|---|---|
| 27 | Manometer | Manomètre | Manometro | Manómetro | Manometer |
| 30 | Dichtscheibe (10X) | Joint (10X) | Guarnizione (10X) | Junta (10X) | Afdichting (10X) |
| 31 | Rohr | Tube | Tubo | Tubo | Pijp |
| | Umbausatz ZC ----> ZSC ACC NO: 1196 | Kit adaptation ZC ---> ZSC ACC NO: 1196 | Kit prelievo ZC ----> ZSC ACC NO: 119 | Equipo de transformatión ZC ----> ZSC | Umbausatz ZC ----> ZSC ACC NO: 1196 |
| **6** | **Baugruppe** | **Groupe de construction** | **Gruppo di construzione** | **Grupo de construccion** | **Montagegroep** |
| 1 | Oberteil | Partie supérieure | Quadro comandi | Tapa | Bovendeel |
| 2 | Rückwand | Dosseret | Schienale | Respaldo | Achterwand |
| 3 | Leiterplatte | Circuit imprimé | Scheda elettronica | Placa de circuito impreso | Print |
| 4 | Transformator | Transformateur | Trasformatore primario | Transformador | Transformator |
| 5 | Sicherung T2,5A (10x) | Fusible T2,5A (10x) | Fusibile T2,5A (10x) | Fusible T2,5A (10x) | Buissmeltveiligheid T2,5A (10x) |
| 6 | Sicherung T0,5A (10x) | Fusible T0,5A (10x) | Fusibile T0,5A (10x) | Fusible T0,5A (10x) | Buissmeltveiligheid T0,5A (10x) |
| 7 | Sicherung T1,6A (10x) | Fusible T1,6A (10x) | Fusibile T1,6A (10x) | Fusible T1,6A (10x) | Buissmeltveiligheid T1,6A (10x) |
| 8 | Kodierstecker 1504 | CI de codage 1504 | Spina codifica 1504 | Conector codificador 1504 | Codeer stekker 1504 |
| 9 | Steckerset | Plots connexion | Morsetto | Conjunto de anection | Stekkerset |
| 10 | Schalter | Interrupteur | Interruttore | Interruptor | Schakelaar |
| 11 | Deckel | Couvercle | Coperchio nero | Tapa | Deksel |
| 12 | Blende | Cache | Mascherina | Chapa cuadro | Paneel |
| 13 | Drehknopf | Bouton de réglage | Manopola | Botón rotativo | Regelknop |
| 14 | Drehknopf | Bouton de réglage | Manopola | Botón rotativo | Regelknop |
| 15 | Klappe | Couvercle | Sportello | Tapa | Deksel |
| 16 | Kabelbaum | Faisceau de câbles | Cablaggio | Mazo de cables | Kabelboom |
| 17 | Kabel | Câble | Cavo | Cable | Kabel |
| 18 | Kabel | Câble | Cavo | Cable | Kabel |
| 19 | Kabel | Câble | Cavo d'alimentazione | Cable de alimentación | Kabel |
| 20 | Gebläsekabel | Faisceau ventilateur | Cablaggio ventilatore | Ventilador cable | Ventilatorleiding |
| 21 | Führungsbuchse | Coquille | BOCCOLA | Boccola de guido | Geleidingsschroef met |
| 22 | Tüllensatz | Bouchon de pré câblage électrique | Set di guarnizioni | Conjunto de abrazadera de goma | Tule set |
| 23 | Tüllensatz | Sachet de raccord tuyau souple | Set di guarnizioni | Conjunto de abrazadera de goma | Tule set |
| 24 | Steuergerät | Tableau électrique | Cassetta ionizzazione | Aparato de mando | Besturingsautomaat |
| **7** | **Baugruppe** | **Groupe de construction** | **Gruppo di construzione** | **Grupo de construccion** | **Montagegroep** |
| 1 | Gebläse | Ventilateur | Ventilatore | Ventilador | Ventilador |
| 2 | Schraube | Vis | Vite | Tornillo | Schroef |
| 5 | Differenzdruckschalter | Pressostat | Interruttore differenziale | Interruptor de presión | Drukverschilschakelaar |
| 6 | Halterung | Support | Supporto | Sujeción | Houder |
| 8 | Rohr-Kit | Tube condensation field fix | Tubo condensation field fix | Tubo condensation field fix | Pijp condensation field fix |

| Types of appliances<br>Gerätetypen | Types de chaudieres<br>Tipo apparecchi | | Tipos de aplicaciones<br>Toesteltypes |
|---|---|---|---|
| Appliance<br>Gerät<br>Chaudiere<br>Apparecchio<br>Aparato<br>Toestel | Ordering no.<br>Bestell-Nr.<br>Numero de commande<br>n° d'ordine<br>Número el ordenar<br>Bestelnummer | Country<br>Land<br>Pay<br>Paese<br>Paese<br>Land | Remarks<br>Bemerkungen<br>Remarques<br>Osservazioni<br>Observaciones<br>Opmerkingen |
| | | | |
| **NGVA28-4HB S0200** | 7 716 704 520 | France | |
| **NGVA28-4HN S0200** | 7 716 704 438 | France | |
| **NGVA35-4HN S0200** | 7 716 704 440 | France | |
| **NGVS28-4HB S0200** | 7 716 704 521 | France | |
| **NGVS28-4HN S0200** | 7 716 704 441 | France | |
| **NGVS35-4HN S0200** | 7 716 704 443 | France | |
| | | | |
| **NGVA24-4 HN S0400** | 7 716 704 492 | Italy | |
| **NGVA28-4HN S0400** | 7 716 704 462 | Italy | |
| **NGVA35-4HN S0400** | 7 716 704 494 | Italy | |
| **NGVS24-4HN S0400** | 7 716 704 495 | Italy | |
| **NGVS28-4HN S0400** | 7 716 704 464 | Italy | |

e.l.m. leblanc
124, 126 rue de Stalingrad
F-93711 Drancy Cedex
www.elmleblanc.fr